Duplex SC Fiber Adapter MOS Modules

APPLICATION

For configuring single-mode and multimode SC fiber connectivity in the Multimedia Outlet System (MOS). All MOS modules snap into MOS wallplates and surface-mount housings from the front or side.

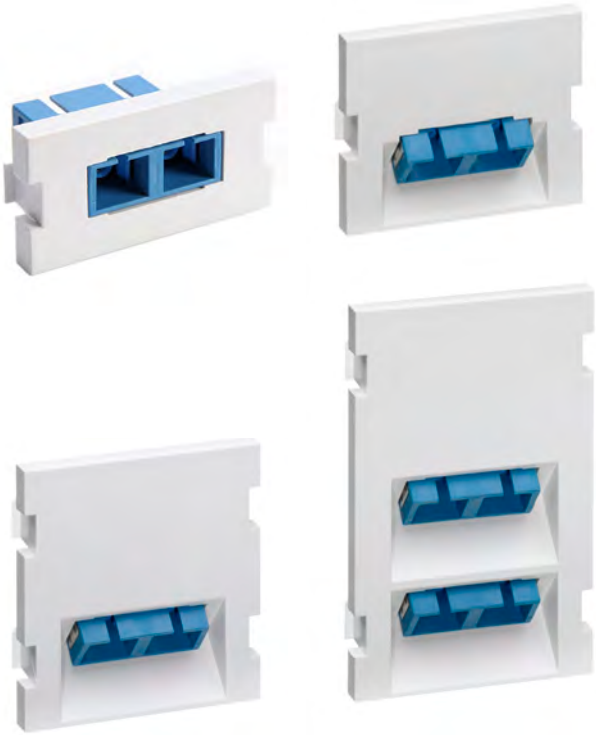

FEATURES

- Can be used with single-mode and multimode fiber
- Modules load into housings from the front or side
- Available in four colors: white, ivory, grey, and black
- Available in 1, 1.5, 2, and 3 units high

DESIGN CONSIDERATIONS

- Modules fit MOS housings and wallplates only
- 1.5, 2, and 3-unit-high modules have a 45-degree exit/angle
- Use angled modules when a low profile exit is desired
- Place angled modules in bottom of wallplate to allow cable clearance at top of wall opening

STANDARDS COMPLIANCE

ANSI/TIA-568-C compliant
cULus Listed (UL1863, CAN/CSA-C22.2 No. 182.4-M90)

PHYSICAL SPECIFICATIONS

Dimensions:	See page two
Materials:	Fire-retardant plastic, rated UL 94V-0 SC adapters available with ceramic or metal sleeve SC adapters are multimode/single-mode
Mounting:	Snaps into MOS wallplate or surface-mount housing

COUNTRY OF ORIGIN

Taiwan

WARRANTY INFORMATION

For a copy of Leviton product warranties, visit www.leviton.com/warranty.

SPECIFICATION

The outlet adapter modules shall comply with TIA/EIA-568-C requirements. It shall be made of fire-retardant plastic. Adapters shall be type SC with metal or ceramic sleeve for multimode and singlemode application. Modules shall be interchangeable, mounting between various multimedia surface- and flush-mount outlets. Modules shall be capable of maintaining a minimum cable bend-radius within the area of minimum NEMA box enclosures.

ELECTRONIC FILES

For CAD files, typical specs, or technical drawings (.DXF, .DWG), visit www.leviton.com.

41291-2Cx, 41294-2Cx, 41292-2Cx, 41293-4Cx

Leviton Network Solutions
2222 - 222nd St. SE
Bothell, WA 98021-4416

tel 1-800-824-3005
tel +1-425-486-2222
appeng@leviton.com
www.leviton.com

Asia / Pacific
T +1.631.812.6228
E infoasean@leviton.com

Canada
T +1.514.954.1840
E pcservice@leviton.com

Caribbean
T +1.954.593.1896
E infocaribbean@leviton.com

China
T +852.2774.9876
E infochina@leviton.com

Colombia
T +57.1.743.6045
E infocolombia@leviton.com

Europe
T +33.6.8869.1380
E infoeurope@leviton.com

India / SAARC
T +91.80.4322.5678
E infoindia@leviton.com

Mexico
T +52.55.5082.1040
E lsamarketing@leviton.com

Middle East & Africa
T +971.4.886.4722
E lmeinfo@leviton.com

South Korea
T +82.2.3273.9963
E infokorea@leviton.com

Copyright © 2014 Leviton Manufacturing Co., Inc. All rights reserved. Subject to change without notice.

Revised May 2014

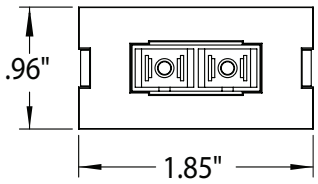

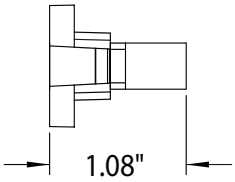

41291-2Cx (1 unit high)

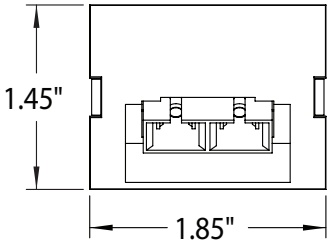

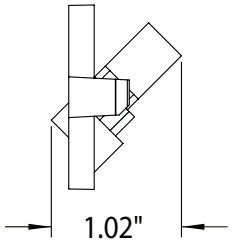

41294-2Cx (1.5 units high)

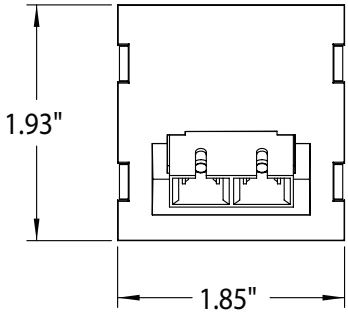

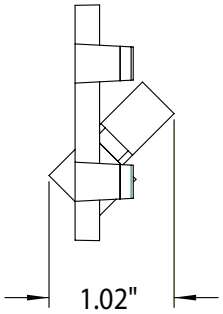

41292-2Cx (2 units high)

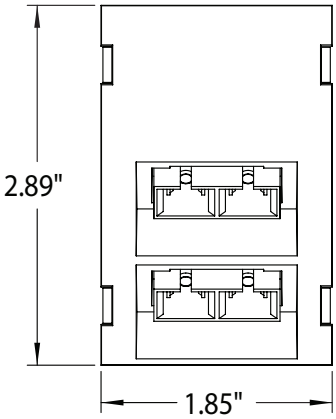

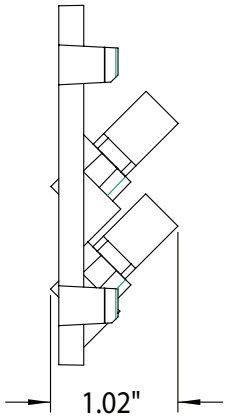

41293-2Cx (3 units high)

DUPLEX SC FIBER ADAPTER MOS MODULES

Description	White	Ivory	Grey	Black
1 Duplex SC, zirconia ceramic, SM/MM, 1 unit high	41291-2CW	41291-2CI	41291-2CG	41291-2CE
1 Duplex SC, zirconia ceramic, SM/MM, 1.5 units high	41294-2CW	41294-2CI	41294-2CG	41294-2CE
1 Duplex SC, zirconia ceramic, SM/MM, 2 units high	41292-2CW	41292-2CI	41292-2CG	41292-2CE
2 Duplex SC, zirconia ceramic, SM/MM, 3 units high	41293-4CW	41293-4CI	41293-4CG	41293-4CE

E14 4885

Leviton Network Solutions
2222 - 222nd St. SE
Bothell, WA 98021-4416

tel 1-800-824-3005
tel +1-425-486-2222
appeng@leviton.com
www.leviton.com

Asia / Pacific
T +1.631.812.6228
E infoasean@leviton.com

Canada
T +1.514.954.1840
E pcservice@leviton.com

Caribbean
T +1.954.593.1896
E infocaribbean@leviton.com

China
T +852.2774.9876
E infochina@leviton.com

Colombia
T +57.1.743.6045
E infocolombia@leviton.com

Europe
T +33.6.8869.1380
E infoeurope@leviton.com

India / SAARC
T +91.80.4322.5678
E infoindia@leviton.com

Mexico
T +52.55.5082.1040
E lsamarketing@leviton.com

Middle East & Africa
T +971.4.886.4722
E lmeinfo@leviton.com

South Korea
T +82.2.3273.9963
E infokorea@leviton.com

Copyright © 2014 Leviton Manufacturing Co., Inc. All rights reserved. Subject to change without notice.

Revised May 2014