Honeywell

MICRO SWITCH™ BX | BX2 Hazardous Area Switches

BX | BX2 Series

Datasheet

MICRO SWITCH™ BX/BX2 Series Hazardous Location Limit Switches

The MICRO SWITCH™ BX/BX2 Series are designed for applications in hazardous or explosive environments requiring a rugged, durable switch virtually anywhere in the world. To comply with explosion-proof switching requirements, the flame path within the switch housing is designed to contain and cool escaping hot gases and fumes that could cause an explosion outside of the switch. Regardless of where the equipment or machinery is designed, built, or installed, BX and BX2 Series products carry global agency coverage.

Honeywell offers two versions of the BX series switch: the standard BX Series features an aluminum housing, while the BX2 series features a 316L stainless steel housing. The stainless steel housing adds additional resistance against corrosion in applications exposed to aggressive, caustic agents, as well as those often present in chemical processing plants, off-shore/near-shore sites, and other hazardous areas. Both products are weather sealed for outdoor use and designed for explosive gas/dust environments. All operating heads of the BX/BX2 Series are field adjustable at 90° increments.

What makes our switches better?

- Around-the-world use in hazardous areas with international approvals: UL, CSA, ATEX (CE), IEC Ex, INMETRO, NEPSI Ex (China), and EAC (formerly GOST-R, Russia)
- Industry-leading breadth of product offering that includes: BX (aluminum housing) and BX2 (stainless steel housing) limit switches for hazardous locations
- Top-of-the-line environmental sealing combined with Honeywell expertise for hazardous location package design provides the right product for the right application
- 303 stainless steel operating shaft on sintered bronze bearing for enhanced mechanical life and operational reliability
- Exclusive teller tab on levers ensures proper torque. When the tab cannot be moved, the lever is tight enough to prevent slippage

Ready to work... anywhere in the world!

RELIABILITY • SAFETY • RUGGED • BUILT TO FIT

Features and Benefits

SEALED TO NEMA 1, 3, 4, 6, 13; IP67

MICRO SWITCH™ BX/BX2 limit switch **NEMA/IP sealing** features twin shaft seals for an extra measure of protection. They are suitable for applications in **demanding indoor and/or outdoor environments,** where they may be subjected to shock or vibration from equipment, temperature extremes, dust, splashing water, coolant, and/or hose-directed water.

International approvals for use around the world

READY TO WORK - AROUND THE WORLD

Agency coverage for hazardous locations provided through UL, CSA, ATEX (CE), IEC Ex, INMETRO (Brazil), NEPSI Ex (China), KOSHA (select listings - Korea), and EAC (formerly GOST-R, Russia)

Industry-leading breadth of products

WIDE VARIETY OF PRODUCT OFFERING

Broad range of actuator styles are available for both aluminum and stainless steel head and body types. Many options for pin and roller plungers, rotary levers, or wobble (multidirectional) actuation facilitate installation. Single-pole or double-pole basic switch with gold or silver contacts provide reliable control of low energy or power-duty switching.

WITHSTANDS MANY CAUSTIC ENVIRONMENTS

Two rugged designs are available: **aluminum** or **corrosion-resistant stainless steel** head and body. Both designs are suitable for indoor and outdoor applications. A **diaphragm seal** between head and body provides an extra measure of protection. Switches remain functional when exposed to many severe environments and caustic chemicals.

OPTIONAL SEALS

Standard fluorosilicone seals are suitable for most applications, but **optional fluorocarbon seals** are available for harsh chemical or higher temperature environments.

UNIQUE DESIGN FEATURES

The head design is keyed for **secure head-to-body retention** with the head in any one of four positions 90° apart. Self-lifting pressure plate terminals **saves wiring time.**

DESIGN FLEXIBILITY

Honeywell offers a wide variety of non-sparking actuators, switch options, and head styles for design flexibility. Rotary actuated heads are **field adjustable** for CW actuation, CCW actuation, or both to reduce inventory.

EASILY CONTROLS LOW-VOLTAGE DC APPLICATIONS

Hazardous-area switches are available with a choice of **silver or gold-plated contacts** to handle a variety of electrical load requirements from low energy to power-duty control.

Potential Applications

GRAIN ELEVATORS
Monitors plugged grain conveyors, slide gate position, diverter valves, and leg positions

CONTROL VALVES AND ACTUATORS
Senses the “on” or “off” position of the valve

OFF-SHORE AND ON-SHORE DRILLING
Senses extend and retract position of drilling equipment

PIPELINES
Monitors pig position and resulting pipeline health

PETROCHEMICAL AND CHEMICAL PLANTS
Monitors control valves, doors, gates, and their position

WATER TREATMENT PLANTS
Senses control valve position

PAINT BOOTHS
Door interlocks for sliding or hinged gates or doors

CONVEYORS (ABOVE-GROUND)
Monitors belt tension, belt alignment

PULP AND PAPER
Senses product/material presence, roll size

HAZARDOUS WASTE HANDLING
Often used as a valve position monitor

MICRO SWITCH™ Hazardous Area Limit Switches

Figure 1. MICRO SWITCH™ BX SERIES FEATURES AND OPTIONS

The MICRO SWITCH™ BX2 limit switch has similar features, except a 316L stainless steel head and body without epoxy coating.

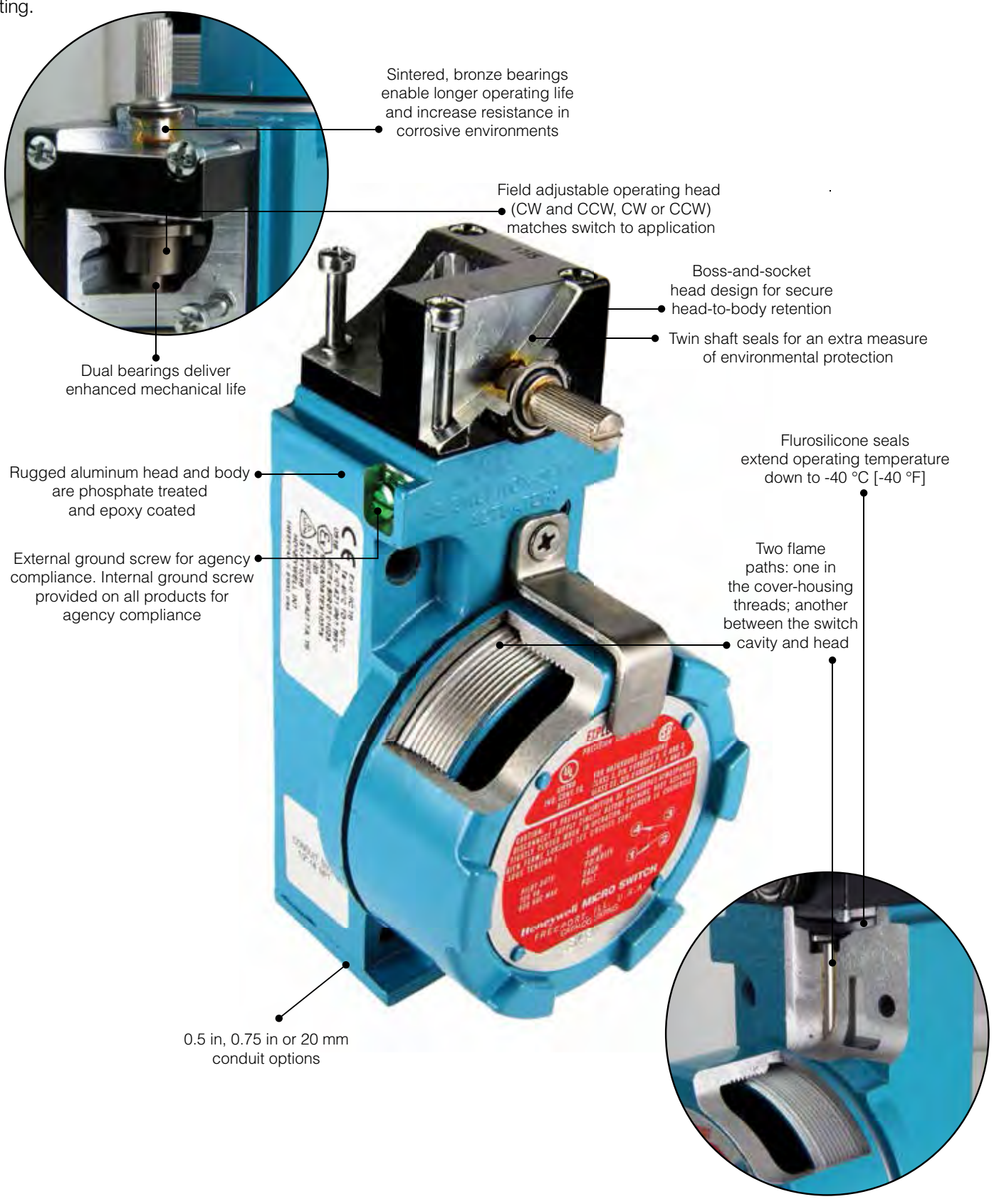

Figure 2. MICRO SWITCH™ BX SERIES PRODUCT NOMENCLATURE

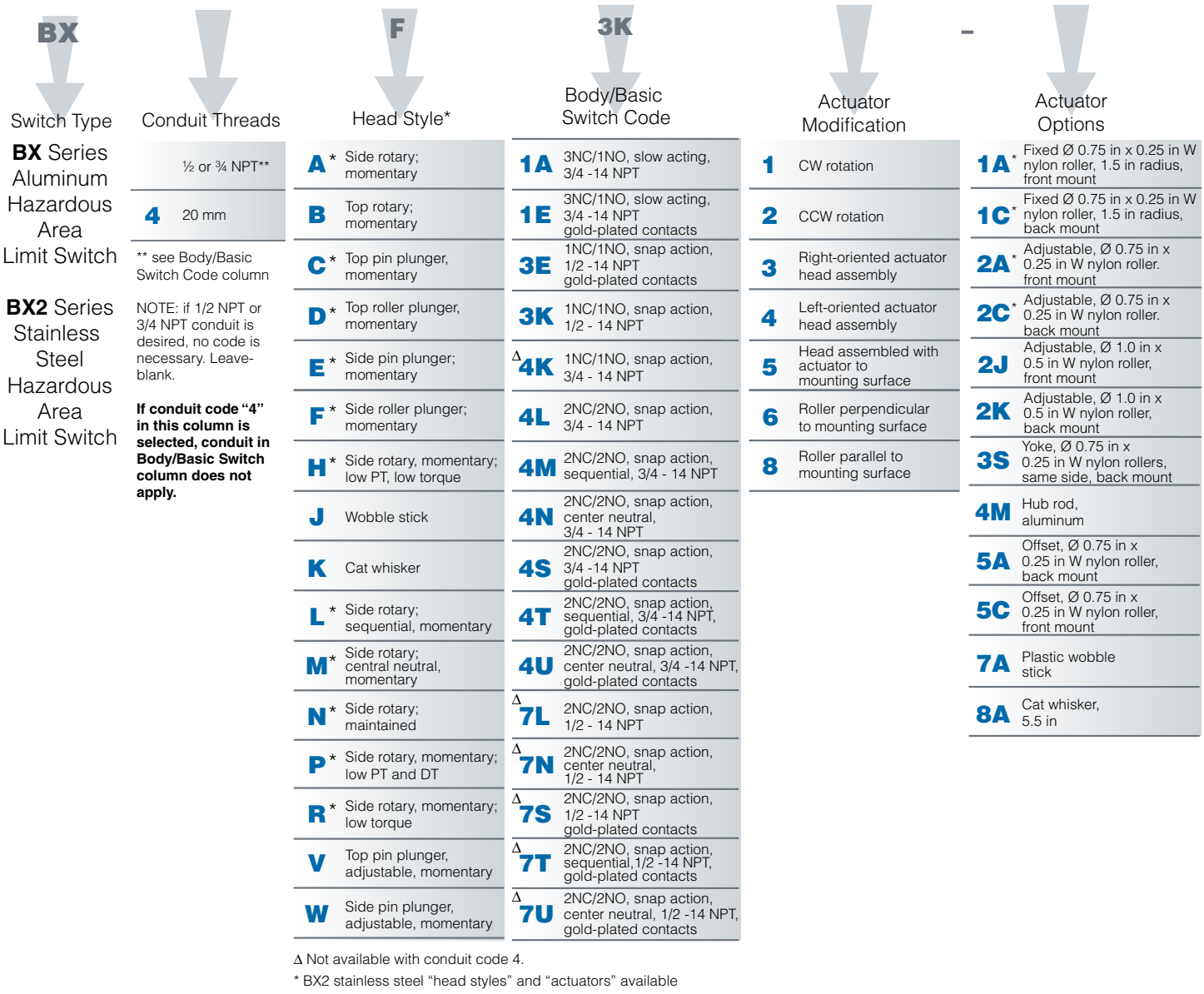

Δ Not available with conduit code 4.

* BX2 stainless steel "head styles" and "actuators" available

To order fluorocarbon versions, insert the additional letter **C** in the appropriate places in the standard catalog listing, as shown below:

BXA3K	standard, side-rotary switch
BXAC3K	completely FC-sealed version of BXA3K

MICRO SWITCH™ Hazardous Area Limit Switches

Table 1. Specifications

Characteristic	Parameter		
Product type	MICRO SWITCH™ hazardous area limit switches		
Actuators	Side pin plunger Side rotary Top pin plunger - adjustable Wobble - cat whisker	Side pin plunger - adjustable Side rotary maintained Top roller plunger Wobble - plastic rod	Side roller plunger Top pin plunger Top rotary
Circuitry	1NC 1NO SPDT snap action, double break 2NC 2NO DPDT snap action, double break 2NC 2NO DPDT snap action, double break, sequential 2NC 2NO DPDT snap action, double break, center neutral 3NC 1NO slow action, double break		
Electrical	10 A thermal Single and double pole: AC15 A600; DC13 R300 (see table on page 8)		
Housing material	Aluminum (BX) or Stainless Steel (BX2)		
Termination types	0.5 in - 14 NPT conduit 0.75 in - 14 NPT conduit 20 mm conduit		
Housing type	BX/BX2 non-plug-in		
Sealing	NEMA 1, 3, 4, 6, 13; IP67		
Operating temperature*	Standard with fluorosilicone seals: -40 °C to 70 °C [-40 °F to 158 °F] Optional with fluorocarbon seals: -12 °C to 70 °C [10 °F to 158 °F]		
ATEX/IEC Ex protection class	II 2 GD, Ex d IIC T6 Gb, Ex tb IIIC T85°C Db		
UNSPSC code	302119		
UNSPSC commodity	302119 Switches and controls and relays		

* Reference operating head styles on page 8 for exceptions.

Table 2. Agency Certifications

		ATEX (CE)[2] Europe	CSA , UL, or cULus[4] Canada, USA	IEC Ex[2] International	KOSHA[1] Korea	NEPSI EX[3] China	INMETRO[2] Brazil	EAC[5] Russia (formerly GOST-R)
	Conduit							
BX Series (aluminum)	M20	•		•		•	•	•
	NPT	•	•	•	•	•	•	•
BX2 Series (stainless steel)	M20	•	•	•		•	•	•
	NPT	•	•	•		•	•	•

[1] BXA3K, BXA4L, and BXB4L catalog listings are KOSHA certified.
[2] ATEX & IEC Ex: II 2 GD; Ex d IIC T6 Gb; Ex tb IIIC T85°C Db; Ta -40 °C to 70 °C or -12 °C to 70 °C (dependent on seal material)
[3] NEPSI Ex: GYJ111016
[4] CSA, cUL, UL: NEMA 7 (Gas) Div 1&2, Class I, Groups B, C, & D; NEMA 9 (Dust) Div 1&2, Class II, Groups E, F, & G
[5] Russia Custom Union Certification per НАНИО «ЦСВЭ» РОСС RU.0001.11ГБ05; 1Ex d IIC T6 Gb X, Ex tb IIIC T85°C Db

MICRO SWITCH™ BX AND BX2 SERIES ELECTRICAL RATINGS: 10 A CONTINUOUS CARRY ac VOLTS; PILOT DUTY: AC15, A600

Electrical Rating	Circuitry	Vac	Amps at 0.35 Power Factor Make	Amps at 0.35 Power Factor Break
AC15, A600	SPDT DPDT	120	60	6
		240	30	3
		480	15	1.5
		600	12	1.2

MICRO SWITCH™ BX AND BX2 SERIES ELECTRICAL RATINGS: dc VOLTS; PILOT DUTY: DC13, R300

Electrical Rating	Circuitry	Vdc	Make & Break Amps Inductive	Make & Break Amps Resistive
DC13, R300	SPDT DPDT	120	0.25	0.8
		240	0.15	0.4

MICRO SWITCH™ BX and BX2 limit switches are capable of the following low voltage dc loads

Circuitry	Vdc	Amps Inductive	Amps Resistive
SPDT, DPDT	24	10	10

SWITCH CONTACT STYLES, DOUBLE BREAK

SPDT (1NC/1NO)	DPDT (2NC/2NO)
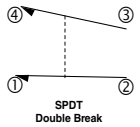	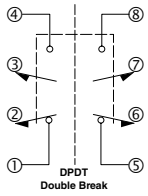

Center Neutral (SPDT each direction)
Pole 1 operates CCW; Pole 2 operates CW

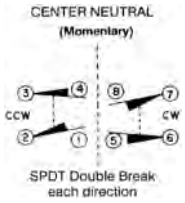

NOTE: Same polarity each pole

LOW TEMPERATURE LIMITS

For all MICRO SWITCH™ BX/BX2 styles, the upper temperature limit is 70 °C [158 °F], while the lower temperature limit is per the table below.

	MICRO SWITCH™ BX/BX2			
	Standard (Fluorosilicone)		Optional (Flurocarbon Sealed)	
Operating Head Styles	-40 °C [-40°F]	-29 °C [-20 °F]	-12 °C [10°F]	-1 °C [30 °F]
BXA, BX2A - Side Rotary Momentary	•		•	
BXB - Top Rotary		•		•
BXC, BX2C - Top Pin Plunger	•		•	
BXD, BX2D - Top Roller Plunger	•		•	
BXE, BX2E - Side Pin Plunger	•		•	
BXF, BX2F - Side Roller Plunger	•		•	
BXH, BX2H - Side Rotary, Low Pretravel and Torque		•		•
BXJ - Wobble Stick		•		•
BXK - Cat Whisker		•		•
BXL, BX2L - Side Rotary, Sequential Operation	•		•	
BXM, BX2M - Side Rotary, Center Neutral	•		•	
BXN, BX2N - Side Rotary, Maintained		•		•
BXP, BX2P - Side Rotary, Low Pretravel	•		•	
BXR, BX2R - Side Rotary, Low Torque		•		•
BXV - Top Adjustable Plunger	•		•	
BXW - Side Adjustable Plunger	•		•	

MICRO SWITCH™ Hazardous Area Limit Switches

FLUOROCARBON SEALED SWITCHES (OPTIONAL)

Fluorocarbon (FC)-sealed switches have an FC o-ring between the threaded cover and body. Rotary types have an extra FC seal on the operating shaft, while plunger versions have FC boot seals. They are for use in applications where the environment includes fire-resistant synthetic fluids, synthetic fluids, water-based fluids, and petroleum-based fluids. The additional FC seals also promote longer operating life for rotary-actuated BX/BX2 switches in applications where the temperatures are normally elevated.

To order, insert the additional letter **C** in the appropriate places in the standard catalog listing, as shown below:

BXA3K	standard, side-rotary switch
BXAC3K	FC-sealed version of BXA3K
BX2A3K	standard, stainless steel side-rotary switch
BX2AC3K	Fluorocarbon-sealed version of BX2A3K

MICRO SWITCH™ BX/BX2 SERIES OPERATING HEADS*

SIDE ROTARY: Heads may be positioned in any one of four positions, 90° increments. All are momentary action except maintained head (BXN/BX2N Series).

BXA/BX2A - Standard: 60° minimum overtravel, 15° maximum pretravel, 5° (single pole) and 7° (double pole) maximum differential travel.

BXR/BX2R - Low operating torque: 60° minimum overtravel, 15° maximum pretravel, 0.19 Nm [1.7 in lb] maximum operating torque.

BXN/BX2N - Maintained contact: Maintained on counterclockwise rotation and reset on clockwise rotation, and vice versa.

BXP/BX2P - Low differential: 68° minimum overtravel, 9° maximum pretravel, 3° (single pole) and 4° (double pole) maximum differential travel.

BXH/BX2H - Low torque, low differential travel: 68° minimum overtravel. Features low operating torque and narrow differential travel.

BXL/BX2L - Sequential operation: 48° minimum overtravel. Delayed action between operation of two poles.

BXM/BX2M - Center neutral: 57° minimum overtravel. One pole operates on the clockwise rotation, and the other pole on the counterclockwise rotation.

*__BX Series__ epoxy-coated zinc heads are shown for illustration. __BX2 Series__ heads are 316L stainless steel.

TOP ROTARY: Available levers provide greater versatility. Heads may be positioned in any one of four positions, 90° increments. All are momentary action.

BXB: With 100° minimum overtravel. Various levers that fit side rotary shafts may be used on the top rotary shaft. Switch is suitable when increased overtravel is required.

TOP PLUNGERS: Available with 4,83 mm [0.19 in] minimum overtravel. Top pin plungers are offered in pin plunger, an adjustable plunger, and a roller plunger. All are momentary action.

BXC/BX2C - Top pin plunger: A copper alloy plunger for in-line actuating motion. Oil-tight seals on plunger and between the operating head and housing keep out coolant, dust, and chips.

BXD/BX2D - Top roller plunger: A copper alloy roller plunger is adjustable to 90° angles to accept cam or slide operation from any of two directions. Boot seal on the plunger.

BXV - Adjustable top pin plunger: A copper alloy adjustable plunger provides easy application and saves on installation time. The operating points of the switch can be adjusted from 52,8 mm to 59,3 mm [2.085 in to 2.335 in]. Seals are the same as the pin plunger.

MICRO SWITCH™ BX/BX2 SERIES OPERATING HEADS

SIDE PLUNGERS: Available with 4,83 mm [0.19 in] minimum overtravel. Side plungers are offered in pin plunger, adjustable pin plunger, and a roller plunger. All are momentary action.

	BXE/BX2E - Side pin plunger: A copper alloy plunger for actuating motion inline with the plunger travel. Actuating head may be rotated in any of four positions, 90° apart. A boot seal on the plunger and a gasket seal between the head and housing keep out coolant, dust, and chips.
	BXF/BX2F - Side roller plunger: A copper alloy roller plunger fits close quarters under cams and slides. The head may be rotated in any of four positions, 90° apart. The roller can be turned vertical or horizontal to the switch. Boot seal on plunger.

	BXW - Adjustable side pin plunger: Has the same features of the side plain plunger plus the means to adjust the operating points of the switch from 41 mm to 47,4 mm [1.615 in to 1.865 in].

WOBBLE LEVER ACTUATING HEADS: Heads come with either a Delrin® plastic rod or copper alloy cat whisker. Any movement of the lever (except pull) will actuate the switch.

BXK - Plastic rod: Recommended where possible scratching or marring by the actuator is to be avoided.	**BXJ - Cat whisker:** Copper alloy actuator designed for low operating force applications.

MICRO SWITCH™ Hazardous Area Limit Switches

SIDE ROTARY • MICRO SWITCH™ BX/BX2 SERIES ORDER GUIDE/RECOMMENDED LISTINGS

Pretravel • 15° max.
Diff. travel (SPDT) • 5° max.
Diff travel (DPDT) • 7° max.
Overtravel • 60° min.
Oper. torque • 0,45 Nm [4 in-lb] max.
*Oper. temp • -40 °C to 70 °C [-40 °F to 158 °F]

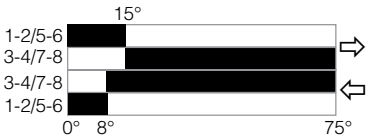

BXA /BX2A • Standard CW/CCW Momentary	Housing Material	Contacts (snap-action)	Contact Material	Conduit	Listing
	Aluminum	1NC-1NO	Silver	0.5-14 NPT	**BXA3K**
	Aluminum	1NC-1NO	Gold plate	0.5-14 NPT	**BXA3E**
	Aluminum	1NC-1NO	Silver	0.75-14 NPT	**BXA4K**
	Aluminum	1NC-1NO	Silver	20 mm	**BX4A3K**
	Aluminum	1NC-1NO	Gold plate	20 mm	**BX4A3E**
	Stainless Steel	1NC-1NO	Silver	0.5-14 NPT	**BX2A3K**
	Stainless Steel	1NC-1NO	Silver	20 mm	**BX24A3K**
	Aluminum	2NC-2NO	Silver	0.75-14 NPT	**BXA4L**
	Aluminum	2NC-2NO	Silver	20 mm	**BX4A4L**
	Aluminum	2NC-2NO	Gold plate	0.5-14 NPT	**BXA7S**
	Aluminum	2NC-2NO	Gold plate	0.75-14 NPT	**BXA4S**
	Stainless Steel	2NC-2NO	Silver	0.75-14 NPT	**BX2A4L**

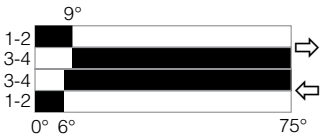

Pretravel • 9° max.
Diff. travel (SPDT) • 3° max.
Diff. travel (DPDT) • 4° max.
Overtravel • 66° min.
Oper. torque • 0,45 Nm [4 in-lb] max.
*Oper. temp • -40 °C to 70 °C [-40 °F to 158 °F]

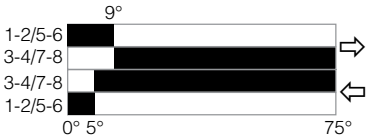

BXP /BX2P • Low Differential CW/CCW Momentary	Housing Material	Contacts (snap-action)	Contact Material	Conduit	Listing
	Aluminum	1NC-1NO	Silver	0.5-14 NPT	**BXP3K**
	Aluminum	2NC-2NO	Silver	0.75-14 NPT	**BXP4L**
	Stainless Steel	2NC-2NO	Silver	0.75-14 NPT	**BX2P4L**
	Stainless Steel	2NC-2NO	Silver	20 mm	**BX24P4L**

Contact closed ■; Contact open □

Actuating head is factory set for CW and CCW actuation. Easily field adjusted for CW or CCW per instructions included with switch.

NOTE: Same polarity each pole.

* Operating temperature range for standard fluorosilicone sealed switch. For optional fluorocarbon sealed switch, see temperature table, page 8. To order a fluorocarbon sealed version, insert the additional letter "**C**" in the standard catalog listing, as follows. The BXA3K limit switch is changed to a BXA**C**3K limit switch.

SIDE ROTARY • MICRO SWITCH™ BX/BX2 SERIES ORDER GUIDE/RECOMMENDED LISTINGS

BXR • Low Torque, CW and CCW Momentary	Housing Material	Contacts (snap-action)	Contact Material	Conduit	Listing
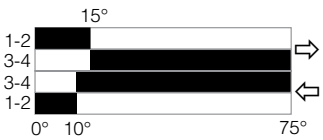 Pretravel • 15° max. Diff. travel (SPDT) • 5° max. Diff. travel (DPDT) • 7° max. Overtravel • 60° min. Oper. torque • 0,19 Nm [1.7 in-lb] max. *Oper. temp • -29 °C to 70 °C [-20 °F to 158 °F] 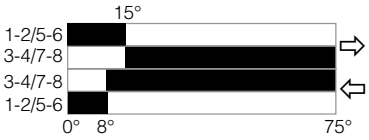	Aluminum	1NC-1NO	Silver	0.5-14 NPT	**BXR3K**
	Aluminum	1NC-1NO	Gold plate	0.5-14 NPT	**BXR3E**
	Aluminum	2NC-2NO	Silver	0.75-14 NPT	**BXR4L**
	Aluminum	2NC-2NO	Gold plate	0.75-14 NPT	**BXR4S**

BXH • Low Differential, Low Torque, CW and CCW Momentary	Housing Material	Contacts (snap-action)	Contact Material	Conduit	Listing
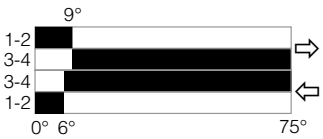 Pretravel • 9° max. Diff. travel (SPDT) • 3° max. Diff. travel (DPDT) • 4° max. Overtravel • 66° min. Oper. torque • 0,19 Nm [1.7 in-lb] max. *Oper. temp • -29 °C to 70 °C [-20 °F to 158 °F] 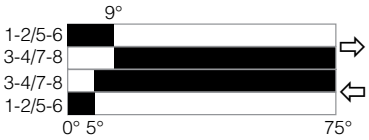	Aluminum	2NC-2NO	Silver	0.75-14 NPT	**BXH4L**

BXB • Top Rotary, CW and CCW Momentary	Housing Material	Contacts (snap-action)	Contact Material	Conduit	Listing
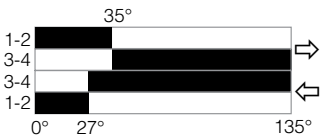 Pretravel • 35° max. Diff. travel (SPDT) • 8° max. Diff. travel (DPDT) • 12° max. Overtravel • 100° min. Oper. torque • 0,28 Nm [2.5 in-lb] max. *Oper. temp • -29 °C to 70 °C [-20 °F to 158 °F] 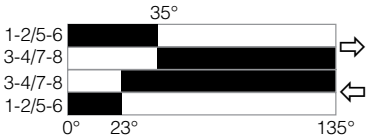	Aluminum	1NC-1NO	Silver	0.5-14 NPT	**BXB3K**

Contact closed ■; Contact open □

Actuating head is factory set for CW and CCW actuation. Easily field adjusted for CW or CCW per instructions included with switch.

NOTE: Same polarity each pole.

* Operating temperature range for standard fluorosilicone sealed switch. For optional fluorocarbon sealed switch, see temperature table, page 8. To order a fluorocarbon sealed version, insert the additional letter "**C**" in the standard catalog listing, as follows. The BXA3K limit switch is changed to a BXA**C**3K limit switch.

MICRO SWITCH™ Hazardous Area Limit Switches

SIDE ROTARY • MICRO SWITCH™ BX/BX2 SERIES ORDER GUIDE/RECOMMENDED LISTINGS

BXN • Maintained, Two Position CCW (trip), CW (Reset)	Housing Material	Contacts (snap-action)	Contact Material	Conduit	Listing
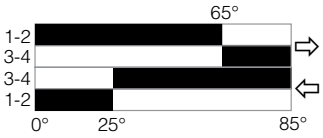 Pretravel • 65° max. Diff. travel • 40° max. Overtravel • 20° min. Oper. torque • 0,45 Nm [4 in-lb] max. *Oper. temp • -29 °C to 70 °C [-20 °F to 158 °F] 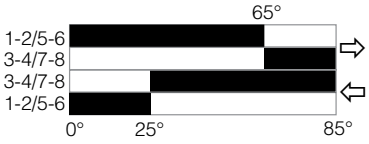	Aluminum	1NC-1NO	Silver	0.5-14 NPT	**BXN3K**
	Aluminum	1NC-1NO	Silver	20 mm	**BX4N3K**
	Aluminum	2NC-2NO	Silver	0.75-14 NPT	**BXN4L**
	Aluminum	2NC-2NO	Silver	20 mm	**BX4N4L**

BXM • Center Neutral, CW and CCW Momentary	Housing Material	Contacts (snap-action)	Contact Material	Conduit	Listing
Pretravel • 18° max. Diff. travel • 10° max. Overtravel • 57° min. Oper. torque • 0,45 Nm [4 in-lb] max. *Oper. temp • -40 °C to 70 °C [-40 °F to 158 °F] 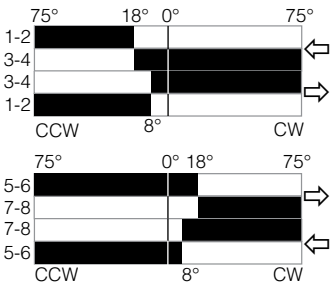	Aluminum	2NC-2NO	Silver	0.75-14 NPT	**BXM4N**
	Aluminum	2NC-2NO	Silver	20 mm	**BX4M4N**

Contact closed ■; Contact open □

NOTE: Same polarity each pole.

* Operating temperature range for standard fluorosilicone sealed switch. For optional fluorocarbon sealed switch, see temperature table, page 8. To order a fluorocarbon sealed version, insert the additional letter "**C**" in the standard catalog listing, as follows. The BXA3K limit switch is changed to a BXA**C**3K limit switch.

Table 3. Common levers for use with MICRO SWITCH™ BX Rotary Switches*

Levers for use with side-rotary-actuated switches are available in a wide choice of sizes and materials. The most common listings are shown below. Rollers may be on either side of the lever to best match the external actuating mechanism.

<table>
<tr>
<td> </td>
<td> </td>
<td> </td>
</tr>
<tr>
<td>Fixed lever, nylon roller
LSZ51A - front mount roller
LSZ51C - back mount roller</td>
<td>Short fixed lever, nylon roller
LSZ59A - front mount roller
LSZ59C - back mount roller</td>
<td>Offset lever, nylon roller
LSZ55A - back mount roller
LSZ55C - front mount roller</td>
</tr>
<tr>
<td> </td>
<td> </td>
<td rowspan="2"> </td>
<td rowspan="2"> </td>
</tr>
<tr>
<td>One-way lever, nylon roller
LSZ60A - front mount roller</td>
<td colspan="2">Yoke lever, nylon rollers
LSZ53A - front/back mount rollers</td>
</tr>
<tr>
<td> </td>
<td> </td>
<td> </td>
<td> </td>
<td> </td>
<td>LSZ67CA**
Plastic conveyor roller</td>
<td>LSZ68
rod with spring
305 mm [12 in]</td>
</tr>
<tr>
<td>Adjustable lever, nylon roller
LSZ52A - back mount roller
LSZ52C - front mount roller</td>
<td>LSZ52J
adjustable lever, nylon roller
25,4 mm [1 in]</td>
<td>LSZ52K
adjustable lever, nylon roller
38,1 [1.5 in]</td>
<td>LSZ54M
aluminum rod
140 mm [5.5 in]</td>
<td>LSZ61
loop
152 mm [6 in]</td>
<td></td>
<td></td>
</tr>
</table>

* Non-sparking rollers and actuators must be used in hazardous areas.
** May require orientation of switch and lever to enable gravity to help restore switch's free position.

MICRO SWITCH™ Hazardous Area Limit Switches

Table 4. BX/BX2 Series Lever Order Guide

	Catalog Listing	Material	Roller Dia. mm [in]	Roller Width mm [in]	Roller Mounting
	Fixed 38,1 [1.5] inch radius				
	LSZ51	Rollerless	n/a	n/a	n/a
	LSZ51A	Nylon	19 [0.75]	6,35 [0.25]	Front
	LSZ51C	Nylon	19 [0.75]	6,35 [0.25]	Back
	LSZ51F	Nylon	25,4 [1.0]	12,7 [0.50]	Front
	LSZ51G	Nylon	38,1 [1.5]	6,35 [0.25]	Front
	LSZ51J	Nylon	25,4 [1.0]	12,7 [0.50]	Back
	LSZ51M	Nylon	19 [0.75]	31,7 [1.25]	Back
	LSZ51P	Nylon	19 [0.75]	12,7 [0.50]	Front
	LS2Z51A (sst)	Nylon	19 [0.75]	6,35 [0.25]	Front
	LS2Z51C (sst)	Nylon	19 [0.75]	6,35 [0.25]	Back
	LS2Z51E (sst)	Copper alloy	19 [0.75]	6,35 [0.25]	Front
	LS2Z51F (sst)	Copper alloy	19 [0.75]	6,35 [0.25]	Back
	Adjustable 38,1 [1.5] in to 3.5 in radius				
	LSZ52	Rollerless	n/a	n/a	n/a
	LSZ52A	Nylon	19 [0.75]	6,35 [0.25]	Back
	LSZ52C	Nylon	19 [0.75]	6,35 [0.25]	Front
	LSZ52E	Nylon	19 [0.75]	33,0 [1.30]	Front
	LSZ52J	Nylon	25,4 [1.0]	12,7 [0.50]	Front
	LSZ52K	Nylon	38,1 [1.5]	6,35 [0.25]	Front
	LSZ52M	Nylon	50,8 [2.0]	6,35 [0.25]	Front
	LSZ52N	Nylon	19 [0.75]	12,7 [0.50]	Front
	LS2Z52A (sst)	Nylon	19 [0.75]	6,35 [0.25]	Front
	LS2Z52C (sst)	Nylon	19 [0.75]	6,35 [0.25]	Back
	LS2Z52E (sst)	Copper alloy	19 [0.75]	6,35 [0.25]	Front
	LS2Z52F (sst)	Copper alloy	19 [0.75]	6,35 [0.25]	Back
	Yoke – 38,1 [1.5] in radius				
	LSZ53A	Nylon	19 [0.75]	6,35 [0.25]	Front/Back
	LSZ53E	Nylon	19 [0.75]	6,35 [0.25]	Back/Front
	LSZ53M	Nylon	19 [0.75]	31,7 [1.25]	Back/Front
	LSZ53S	Nylon	19 [0.75]	6,35 [0.25]	Back/Back
	Rod				
	LSZ54	Hub only	n/a	n/a	n/a
	LSZ54M	Alum, 140 mm [5.5 in]	Ø 3,2 [Ø 0.125]	n/a	n/a
	LSZ54N	Stainless, 330 mm [13 in]	Ø 3,2 [Ø 0.125]	n/a	n/a
	LSZ54P	Plastic rod, 305 mm [12 in]	Ø6,85 [Ø 0.27]	n/a	n/a
	LSZ54W	Plastic rod, 183 mm [7.2 in]	Ø6,85 [Ø 0.27]	n/a	n/a
	Offset – 38,1 [1.5] in radius				
	LSZ55	Rollerless	n/a	n/a	n/a
	LSZ55A	Nylon	19 [0.75]	6,35 [0.25]	Back
	LSZ55C	Nylon	19 [0.75]	6,35 [0.25]	Front
	LSZ55E	Nylon	19 [0.75]	12,7 [0.50]	Front
	LSZ55K	Nylon	38,1 [1.5]	6,35 [0.25]	Front

	Catalog Listing	Material	Roller Dia. mm [in]	Roller Width mm [in]	Roller Mounting
	Short fixed - 1.3 in radius				
	LSZ59A	Nylon	19 [0.75]	6,35 [0.25]	Front
	LSZ59C	Nylon	19 [0.75]	6,35 [0.25]	Back
	One-way roller lever				
	LSZ60A	Nylon	19 [0.75]	6,35 [0.25]	Front
	Flexible loop				
	LSZ61	Ø 4,8 [Ø 0.19] Nylatron	152 mm [6 in] flexible loop		
	LSZ618	Ø 4,8 [Ø 0.19] Nylatron	241 mm [9.5 in] flexible loop		
	LSZ54	Hub only	n/a	n/a	n/a
	Spring rod				
	LSZ68	Delrin rod, 305 mm [12 in]	Ø 6,35 [0.25]	n/a	n/a
	LSZ617	Delrin rod, 406 mm [16 in]	Ø 6,35 [0.25]	n/a	n/a
	LSZ686	Delrin rod, 152 mm [6 in]	Ø 6,35 [0.25]	n/a	n/a
	Rubber roller levers				
	LSZ51Y 38,1 [1.5] radius (standard)	Rubber	50 [2.0]	12,7 [0.5]	front
	LSZ55Y 38,1 [1.5] radius (offset)	Rubber	50 [2.0]	12,7 [0.5]	front
	LSZ52Y 38,1 to 89 [1.5 to 3.5] radius (adjustable)	Rubber	50 [2.0]	12,7 [0.5]	front
	Plastic roller levers				
	LSZ67AA (conveyor)*	Plastic	38,1 [1.5]	96,5 [3.8]	n/a

* May require orientation of switch and lever to enable gravity to help restore switch to free position.

TOP PLUNGER • MICRO SWITCH™ BX/BX2 SERIES ORDER GUIDE/RECOMMENDED LISTINGS

All top plungers are momentary action.

BXC /BX2C • Top Pin Plunger

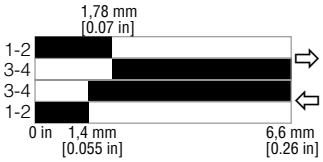

Pretravel • 1,78 mm [0.07 in] max.
Diff. travel (SPDT) • 0,38 mm [0.015 in] max.
Diff travel (DPDT) • 0,51 mm [0.020 in] max.
Overtravel • 4,83 mm [0.190 in] min.
Oper. point • 58,5 ±0,76 mm [2.305 ±0.030 in]
Oper. force • 17,8 N [4 lb] max.
*Oper. temp • -40 °C to 70 °C [-40 °F to 158 °F]

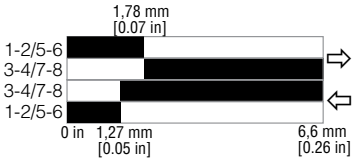

Housing Material	Contacts (snap-action)	Contact Material	Conduit	Listing
Aluminum	1NC-1NO	Silver	0.5-14 NPT	**BXC3K**
Aluminum	1NC-1NO	Silver	0.75-14 NPT	**BXC4K**
Aluminum	1NC-1NO	Silver	20 mm	**BX4C3K**
Aluminum	1NC-1NO	Gold plate	20mm	**BX4C3E**
Aluminum	2NC-2NO	Silver	0.75-14 NPT	**BXC4L**
Aluminum	2NC-2NO	Silver	20 mm	**BX4C4L**
Aluminum	2NC-2NO	Gold plate	20 mm	**BX4C4S**
Stainless steel	2NC-2NO	Silver	0.75-14 NPT	**BX2C4L**
Stainless steel	2NC-2NO	Silver	20 mm	**BX24C4L**

BXD /BX2D • Top Roller Plunger (can be rotated at 90° increments)

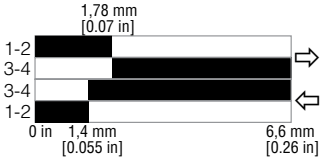

Pretravel • 1,78 mm [0.07 in] max.
Diff. travel (SPDT) • 0,38 mm [0.015 in] max.
Diff travel (DPDT) • 0,51 mm [0.020 in] max.
Overtravel • 4,83 mm [0.190 in] min.
Oper. point • 68,6 ±1,02 mm [2.70 ±0.040 in]
Oper. force • 17,8 N [4 lb] max.
*Oper. temp • -40 °C to 70 °C [-40 °F to 158 °F]

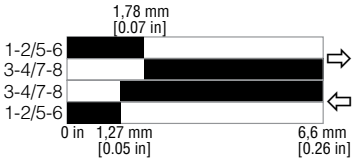

Housing Material	Contacts (snap-action)	Contact Material	Conduit	Listing
Aluminum	1NC-1NO	Silver	0.5-14 NPT	**BXD3K**
Aluminum	1NC-1NO	Silver	20 mm	**BX4D3K**
Aluminum	1NC-1NO	Gold plate	20 mm	**BX4D3E**
Aluminum	2NC-2NO	Silver	0.75-14 NPT	**BXD4L**
Aluminum	2NC-2NO	Silver	20 mm	**BX4D4L**
Aluminum	2NC-2NO	Gold plate	20 mm	**BX4D4S**
Stainless steel	2NC-2NO	Silver	0.75-14 NPT	**BX2D4L**
Stainless steel	2NC-2NO	Silver	20 mm	**BX24D4L**

BXV • Top Adjustable Plunger

Pretravel • 1,78 mm [0.07 in] max.
Diff. travel (SPDT) • 0,38 mm [0.015 in] max.
Diff travel (DPDT) • 0,51 mm [0.020 in] max.
Overtravel • 4,83 mm [0.190 in] min.
Oper. point • 65,66 [2.585] min; 72,01 [2.835] max.
Oper. force • 17,8 N [4 lb] max.
*Oper. temp • -40 °C to 70 °C [-40 °F to 158 °F]

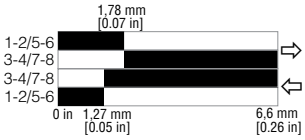

Housing Material	Contacts (snap-action)	Contact Material	Conduit	Listing
Aluminum	2NC-2NO	Silver	0.75-14 NPT	**BXV4L**

Contact closed ■; Contact open □

NOTE: Same polarity each pole.

* Operating temperature range for standard fluorosilicone sealed switch. For optional fluorocarbon sealed switch, see temperature table, page 8. To order a fluorocarbon sealed version, insert the additional letter "**C**" in the standard catalog listing, as follows. The BXA3K limit switch is changed to a BXA**C**3K limit switch.

MICRO SWITCH™ Hazardous Area Limit Switches

SIDE PLUNGER • MICRO SWITCH™ BX/BX2 SERIES ORDER GUIDE/RECOMMENDED LISTINGS

All side plungers are momentary action.

BXE /BX2E • Side Pin Plunger	Housing Material	Contacts (snap-action)	Contact Material	Conduit	Listing
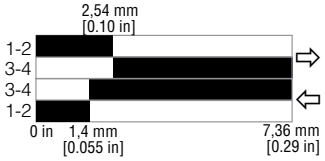 Pretravel • 2,54 mm [0.10 in] max. Diff. travel • 1,14 mm [0.045 in] max. Overtravel • 4,83 mm [0.190 in] min. Oper. point • 33,02 ±0,76 mm [1.30 ±0.030 in] Oper. force • 26,79 N [6 lb] max. *Oper. temp • -40 °C to 70 °C [-40 °F to 158 °F] 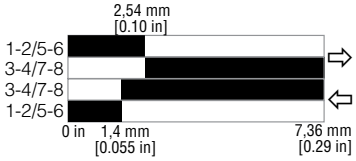	Aluminum	1NC-1NO	Silver	0.5-14 NPT	**BXE3K**
	Aluminum	1NC-1NO	Gold plate	0.5-14 NPT	**BXE3E**
	Stainless steel	1NC-1NO	Silver	0.5-14 NPT	**BX2E3K**
	Stainless steel	1NC-1NO	Gold plate	0.5-14 NPT	**BX2E3E**
	Aluminum	2NC-2NO	Silver	0.75-14 NPT	**BXE4L**
	Aluminum	2NC-2NO	Gold plate	0.75-14 NPT	**BXE4S**

BXF /BX2F • Side Roller Plunger	Housing Material	Contacts (snap-action)	Contact Material	Conduit	Listing
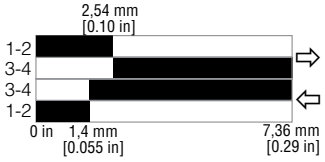 Pretravel • 2,54 mm [0.10 in] max. Diff. travel • 1,14 mm [0.045 in] max. Overtravel • 4,83 mm [0.190 in] min. Oper. point • 44,07 ±1,02 mm [1.735 in ±0.040] Oper. force • 26,79 N [6 lb] max. *Oper. temp • -40 °C to 70 °C [-40 °F to 158 °F] 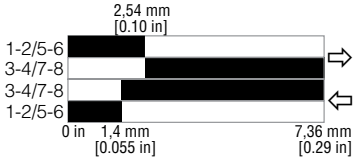	Aluminum	1NC-1NO	Silver	0.5-14 NPT	**BXF3K**
	Aluminum	1NC-1NO	Gold plate	0.5-14 NPT	**BXF3E**
	Stainless steel	1NC-1NO	Silver	0.5-14 NPT	**BX2F3K**
	Stainless steel	1NC-1NO	Gold plate	0.5-14 NPT	**BX2F3E**
	Aluminum	2NC-2NO	Silver	0.75-14 NPT	**BXF4L**
	Aluminum	2NC-2NO	Gold plate	0.75-14 NPT	**BXF4S**

Contact closed ■; Contact open □

NOTE: Same polarity each pole.

* Operating temperature range for standard fluorosilicone sealed switch. For optional fluorocarbon sealed switch, see temperature table, page 8. To order a fluorocarbon sealed version, insert the additional letter "**C**" in the standard catalog listing, as follows. The BXA3K limit switch is changed to a BXA**C**3K limit switch.

WOBBLE • MICRO SWITCH™ BX/BX2 SERIES ORDER GUIDE/RECOMMENDED LISTINGS

BXJ • Wobble, Plastic Rod (7A Actuator)	Housing Material	Contacts (snap-action)	Contact Material	Conduit	Listing
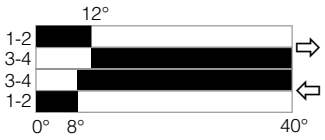 Actuator length • 152 mm [6 in] Pretravel • 25,4 mm [1.0 in] max. Oper. force • 2,8 N [10 oz] max. *Oper. temp • -29 °C to 70 °C [-20 °F to 158 °F] 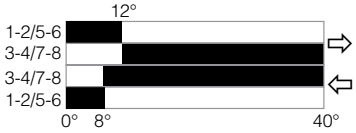	Aluminum	1NC-1NO	Silver	0.5-14 NPT	**BXJ3K-7A**
	Aluminum	1NC-1NO	Silver	20 mm	**BX4J3K-7A**
	Aluminum	1NC-1NO	Gold plate	0.5-14 NPT	**BXJ3E-7A**
	Aluminum	2NC-2NO	Silver	0.75-14 NPT	**BXJ4L-7A**
	Aluminum	2NC-2NO	Silver	20 mm	**BX4J4L-7A**

BXK • Wobble, Cat Whisker (8A Actuator)	Housing Material	Contacts (snap-action)	Contact Material	Conduit	Listing
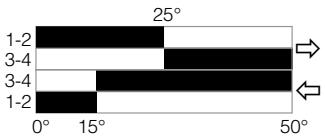 Actuator length • 152 mm [6 in] Pretravel • 50,8 mm [2.0 in] max. Oper. force • 1,4 N [5 oz] max. *Oper. temp • -29 °C to 70 °C [-20 °F to 158 °F] 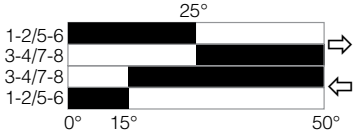	Aluminum	1NC-1NO	Silver	0.5-14 NPT	**BXK3K-8A**
	Aluminum	1NC-1NO	Gold plate	0.5-14 NPT	**BXK3E-8A**
	Aluminum	2NC-2NO	Silver	0.75-14 NPT	**BXK4L-8A**
	Aluminum	2NC-2NO	Silver	20 mm	**BX4K4L-8A**

Contact closed ■; Contact open □

NOTE: Same polarity each pole.

* Operating temperature range for standard fluorosilicone sealed switch. For optional fluorocarbon sealed switch, see temperature table, page 8. To order a fluorocarbon sealed version, insert the additional letter "**C**" in the standard catalog listing, as follows. The BXA3K limit switch is changed to a BXA**C**3K limit switch.

MICRO SWITCH™ Hazardous Area Limit Switches

REPLACEMENT CONTACT BLOCKS

Circuitry	Replacement Contact Block
Single pole	LSXZ3K
Double pole	LSXZ3L
Sequence or central neutral	LSXZ3M

REPLACEMENT HEADS FOR STANDARD BX SWITCHES

Switch Type	Catalog Listing/Operating Head Only
BXA	LSZ1AB
BXB	LSZ1BB
BXC	LSXZ1CB
BXD	LSXZ1DB
BXE	LSXZ1EB
BXF	LSXZ1FB
BXH	LSZ1HB
BXJ	LSZ1JBGA
BXK	LSXZ1KBHA
BXL	LSZ1LB
BXM	LSZ1MB
BXP	LSZ1PB
BXR	LSZ1RB
BXV	LSXZ1VB
BXW	LSXZ1WB

ASSEMBLY MODIFICATIONS

Momentary action rotary switches can be furnished in other than the normal assembled conditions. To specify modifications, add the numbers shown below to the catalog listings. Modification number suffixes are:

1 Clockwise actuation only
2 Counterclockwise actuation only
3 Shaft to right of switch front
4 Shaft to left of switch front
5 Shaft to back of switch

For example,
Catalog listing BXA3K**23** is a BXA3K switch adjusted for counter-clockwise actuation only. The operating shaft is to the right side of the switch when viewing it from the front (label side). No lever.

PLUNGER ASSEMBLY MODIFICATIONS

Add the following modification numbers to the catalog listing in the plunger switch:

3 Side plunger to right of switch front
4 Side plunger to left of switch front
5 Side plunger to back of switch
6 Roller on top plungers perpendicular to mounting surface
8 Roller on side plungers in vertical position

For example,
Catalog listing BXF3K**3** is a BXF3K switch with the side roller plunger to the right side.

Figure 3. MICRO SWITCH™ BX Series Side Rotary Product Dimensions • mm [in]
SIDE ROTARY - HEAD CODES: A, H, L, M, N, P, Q, AND R

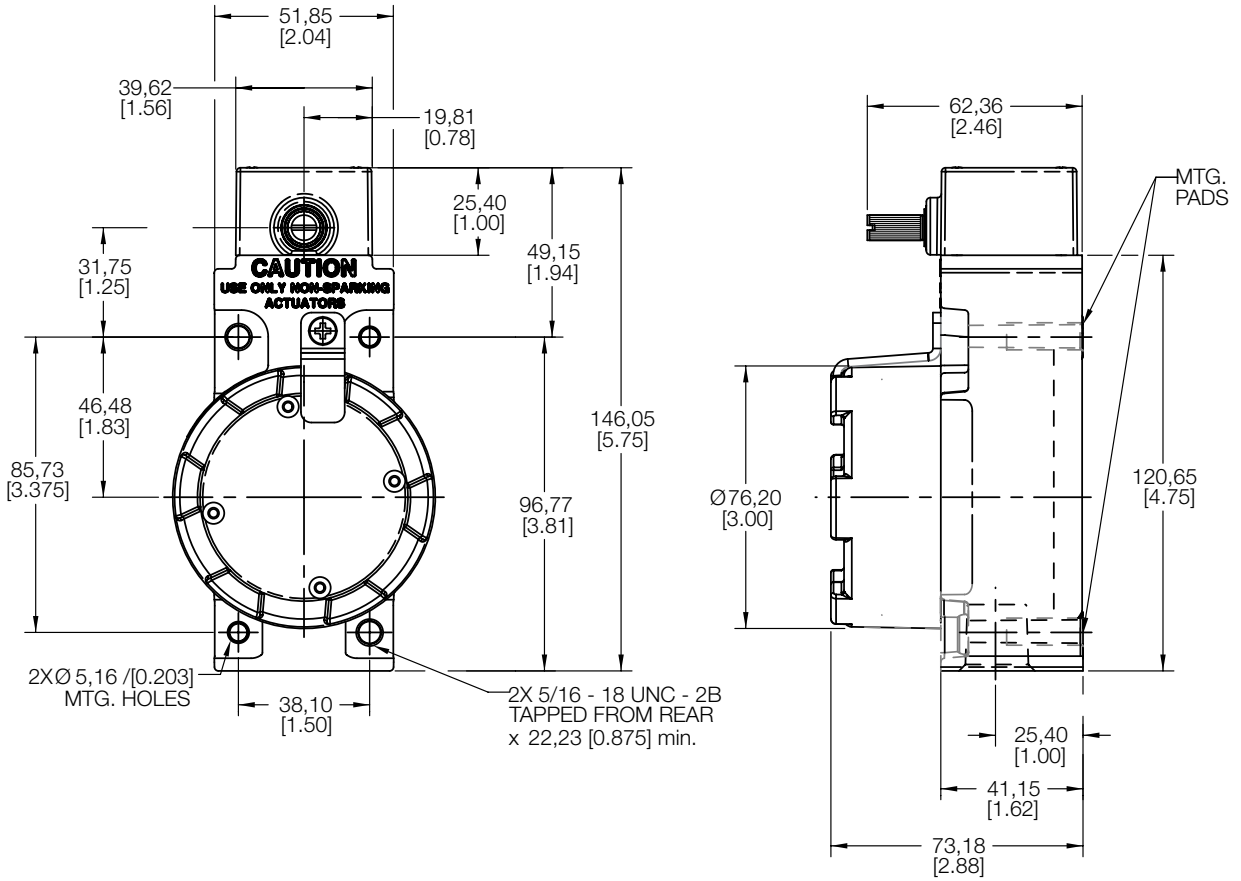

Figure 4. MICRO SWITCH™ BX SERIES WOBBLE STICK, HEAD CODE J • mm [in]

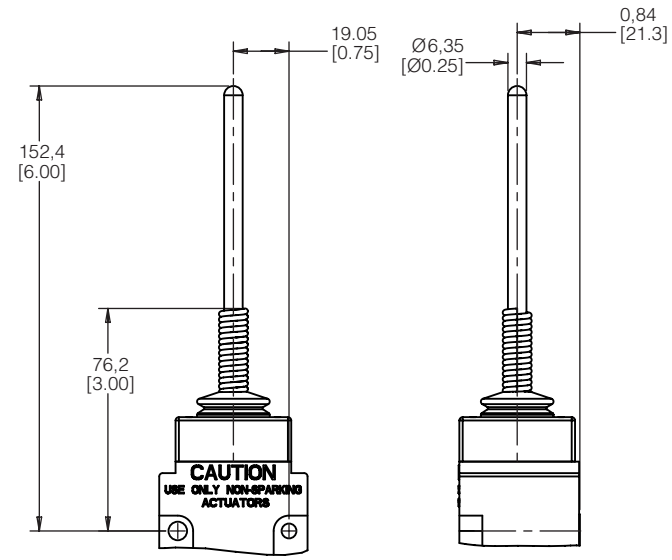

Figure 5. MICRO SWITCH™ BX SERIES CAT WHISKER WOBBLE, HEAD CODE K • mm [in]

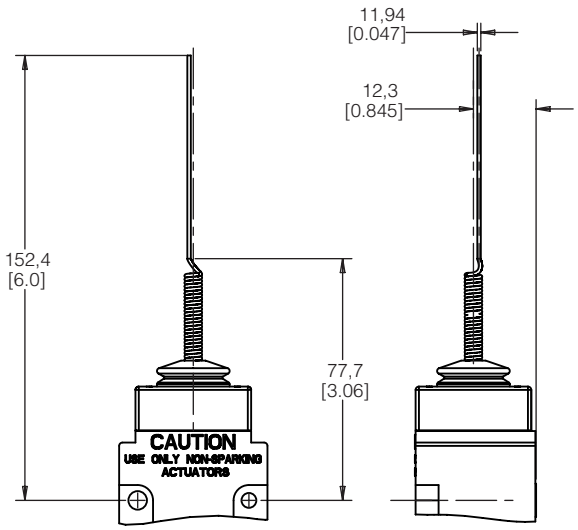

Figure 6. MICRO SWITCH™ BX SERIES TOP ROTARY, HEAD CODE B • mm [in]

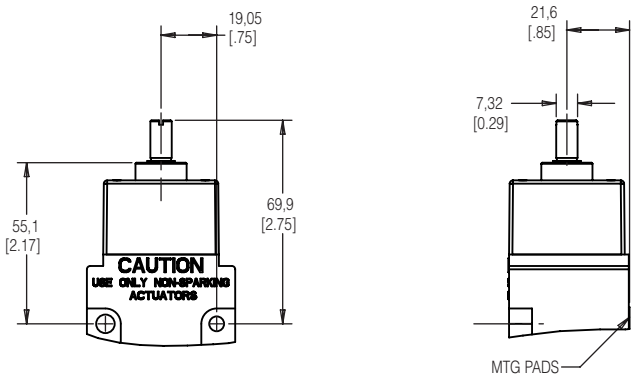

Figure 7. MICRO SWITCH™ BX SERIES TOP PIN PLUNGER, HEAD CODE C • mm [in]

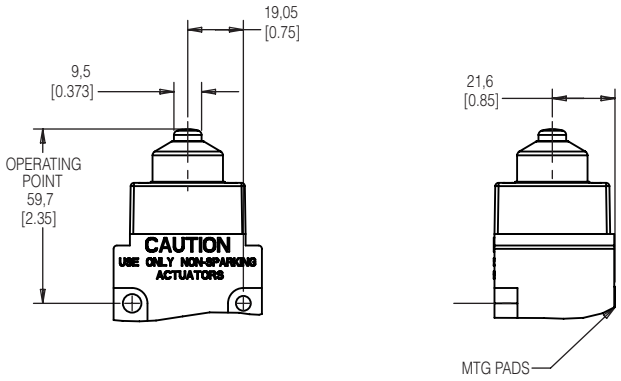

Figure 8. MICRO SWITCH™ BX SERIES TOP ROLLER PLUNGER, HEAD CODE D • mm [in]

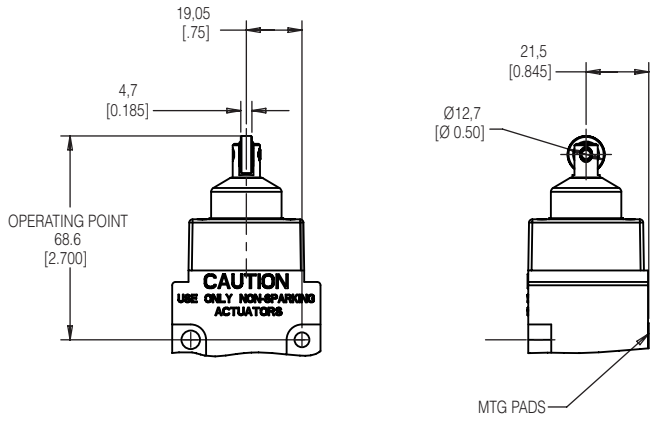

Figure 9. MICRO SWITCH™ BX SERIES SIDE PLUNGER, HEAD CODE E • mm [in]

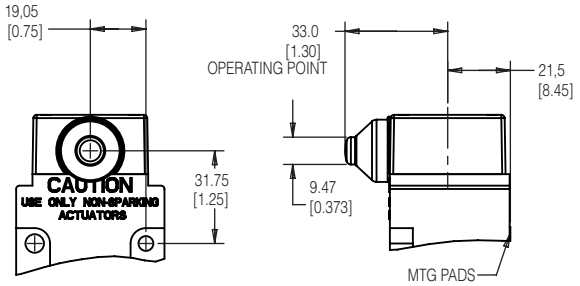

Figure 10. MICRO SWITCH™ BX SERIES SIDE ROLLER PLUNGER, HEAD CODE F • mm [in]

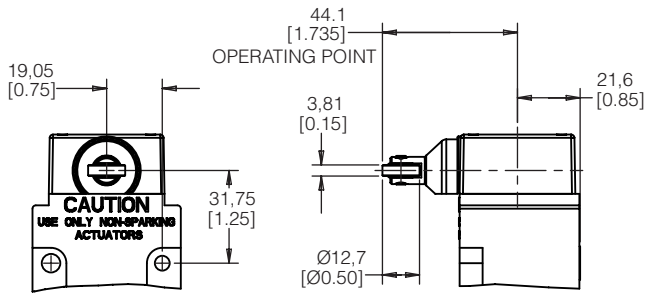

Figure 11. MICRO SWITCH™ BX SERIES ADJUSTABLE TOP PIN PLUNGER, HEAD CODE V • mm [in]

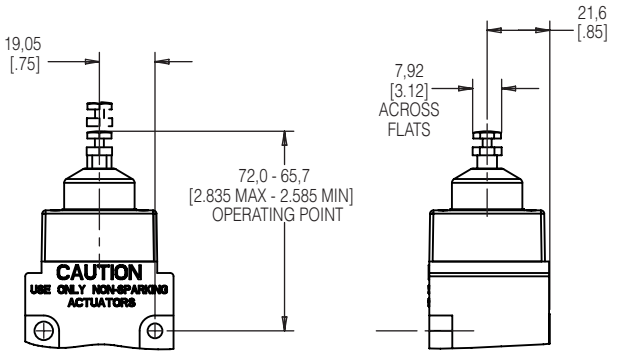

Figure 12. MICRO SWITCH™ BX SERIES ADJUSTABLE SIDE PIN PLUNGER, HEAD CODE W • mm [in]

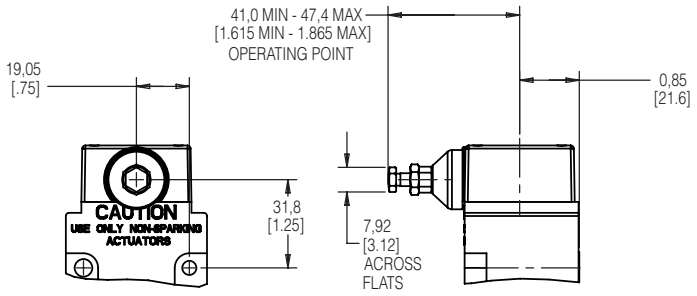

Figure 13. MICRO SWITCH™ BX2 Series Side Rotary Product Dimensions • mm [in]
SIDE ROTARY - HEAD CODES: A, P, AND R

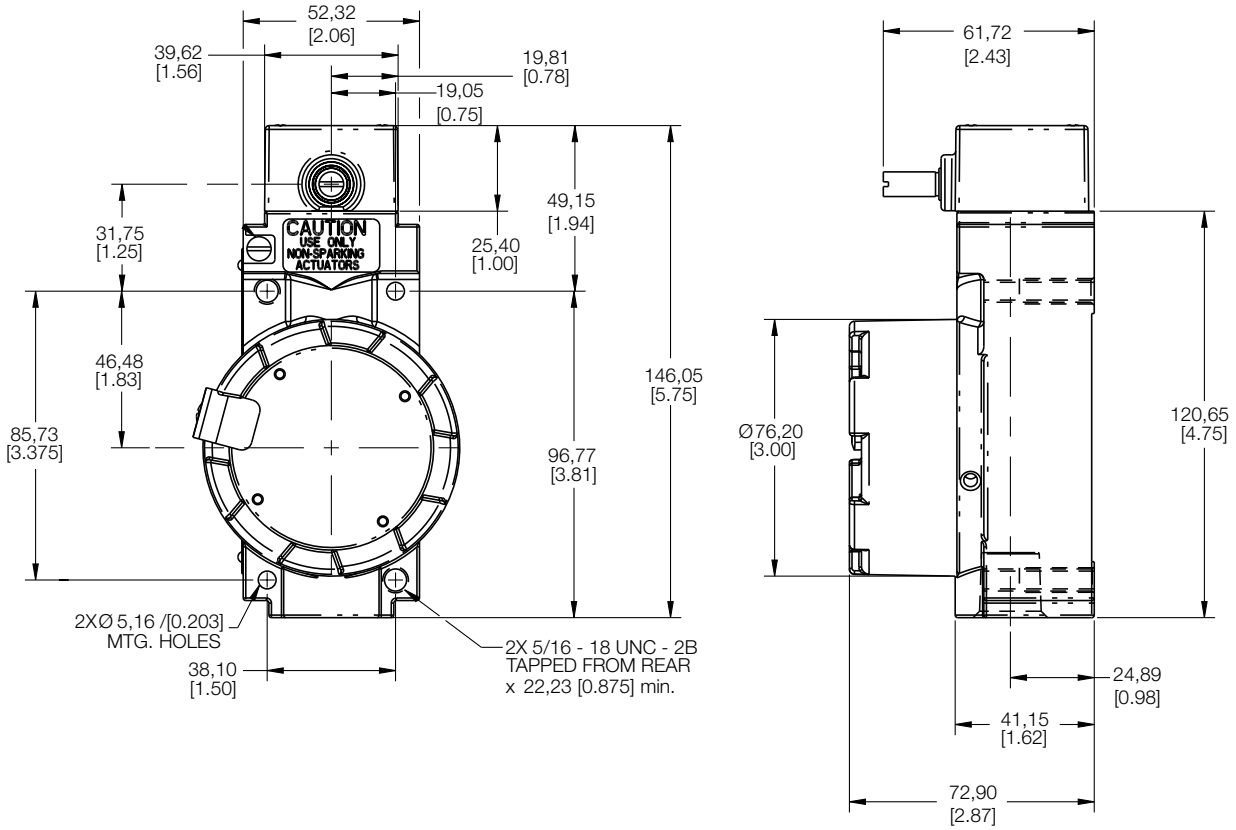

Figure 14. MICRO SWITCH™ BX2 Series Top Plunger Product Dimensions • mm [in]
TOP PLUNGER - HEAD CODES: C and D

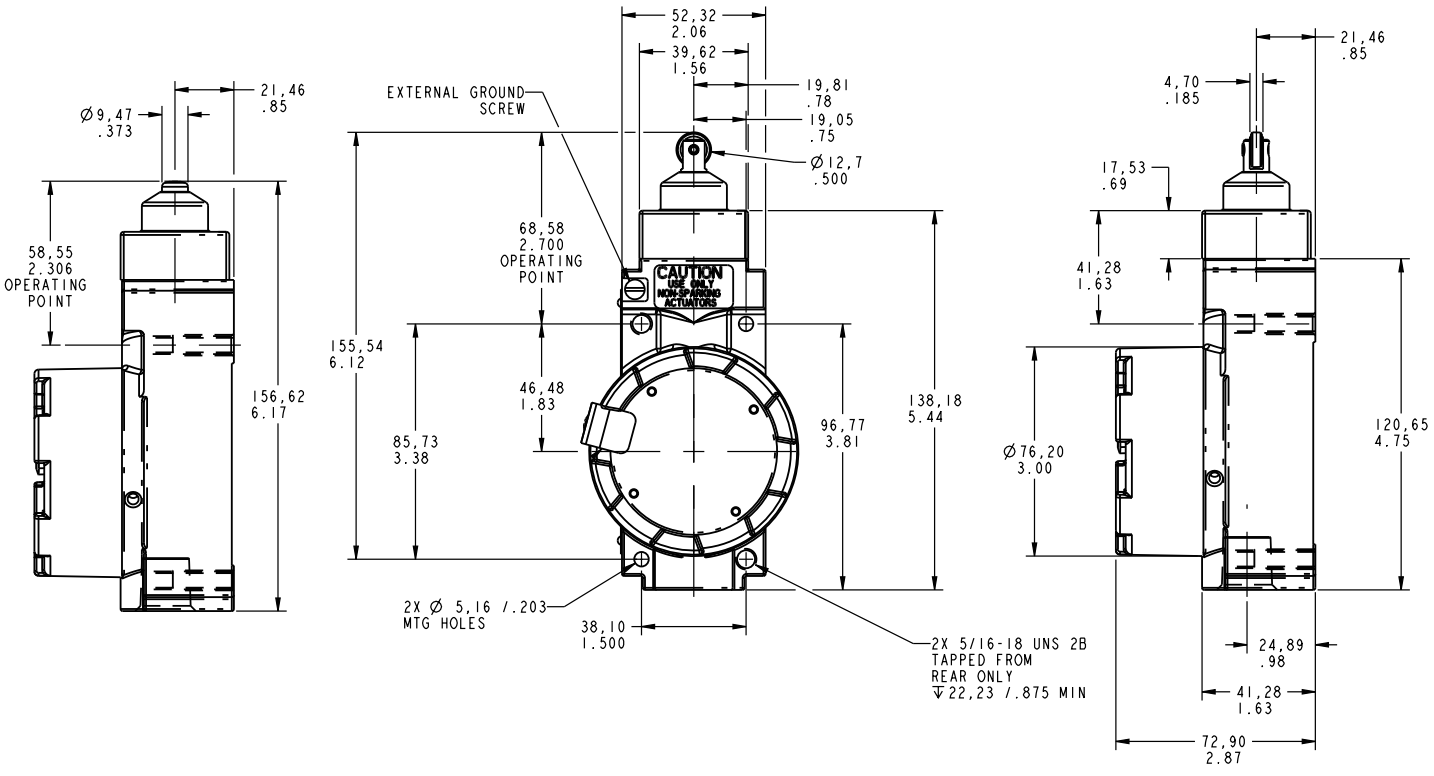

MICRO SWITCH™ Hazardous Area Limit Switches

Figure 15. MICRO SWITCH™ BX2 Series Side Plunger Product Dimensions • mm [in]
SIDE PLUNGER - HEAD CODES: E and F

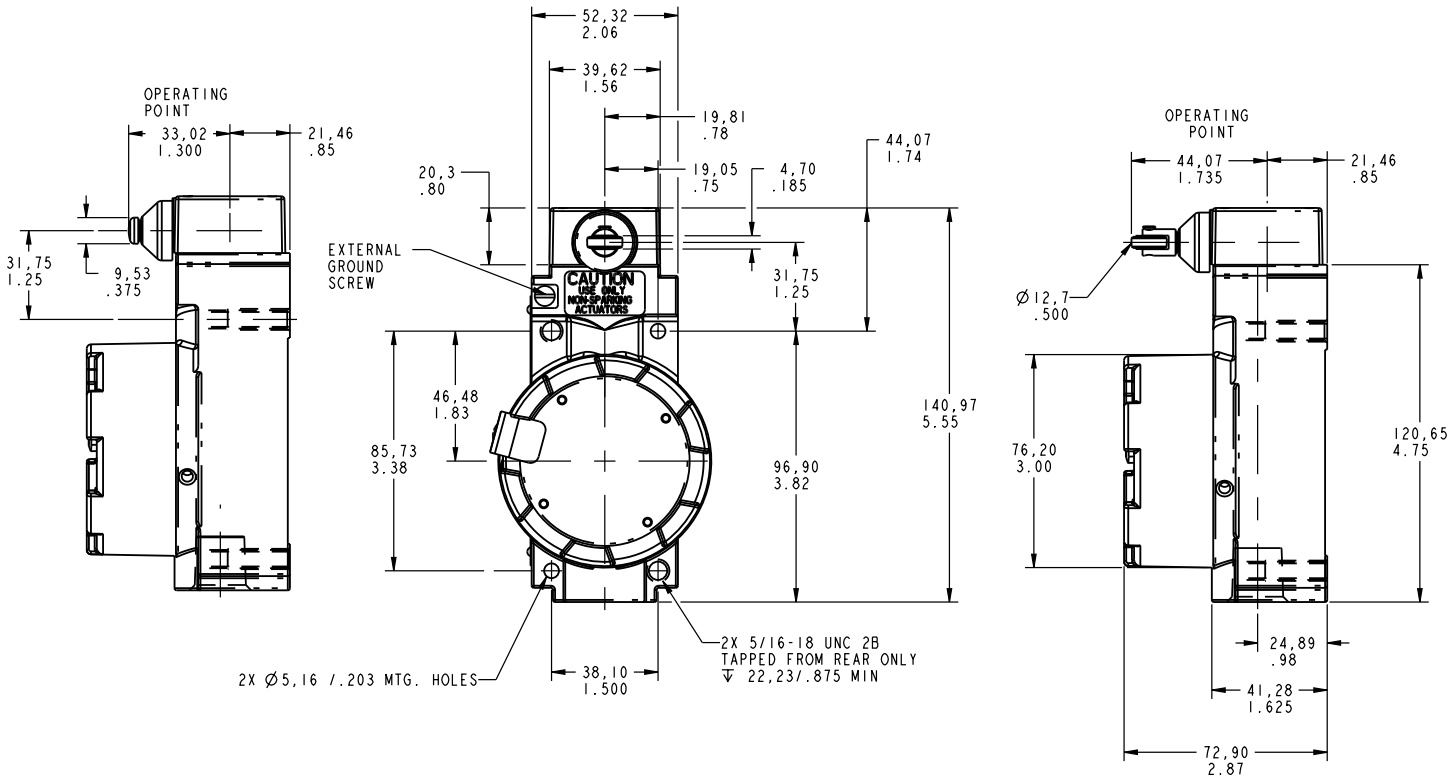

ADDITIONAL INFORMATION

The following associated literature is available on the Honeywell web site at sensing.honeywell.com:

- Product installation instructions
- Product range guide
- Hazardous area product brochure
- Product application-specific information
  - Application Note: Gas Recovery Unit and Other O&G Drilling Applications
  - Application Note: Pipeline Pig Passage Detection/Indicator Applications
  - Application Note: Electronic Sensors and Electromechanical Switches in Valves and Flow Meters
  - Application Note: Sensors and Switches Used in Valve Actuators and Valve Positioners
  - Application Note: Sensors and Switches for Industrial Manual Process Valves
  - Sensors and Switches in Oil Rig Applications

Find out more

Honeywell serves its customers through a worldwide network of sales offices, representatives and distributors. For application assistance, current specifications, pricing or name of the nearest Authorized Distributor, contact your local sales office.

To learn more about Honeywell's sensing and switch products, call **+1-815-235-6847 or 1-800-537-6945**, visit **sensing.honeywell.com,** or e-mail inquiries to **info.sc@honeywell.com**

Sensing and Productivity Solutions
Honeywell
1985 Douglas Drive North
Golden Valley, MN 55422
honeywell.com

⚠WARNING
PERSONAL INJURY

DO NOT USE these products as safety or emergency stop devices or in any other application where failure of the product could result in personal injury.

Failure to comply with these instructions could result in death or serious injury.

⚠WARNING
MISUSE OF DOCUMENTATION

- The information presented in this product sheet is for reference only. Do not use this document as a product installation guide.
- Complete installation, operation, and maintenance information is provided in the instructions supplied with each product.

Failure to comply with these instructions could result in death or serious injury.

WARRANTY/REMEDY

Honeywell warrants goods of its manufacture as being free of defective materials and faulty workmanship. Honeywell's standard product warranty applies unless agreed to otherwise by Honeywell in writing; please refer to your order acknowledgement or consult your local sales office for specific warranty details. If warranted goods are returned to Honeywell during the period of coverage, Honeywell will repair or replace, at its option, without charge those items it finds defective. **The foregoing is buyer's sole remedy and is in lieu of all other warranties, expressed or implied, including those of merchantability and fitness for a particular purpose. In no event shall Honeywell be liable for consequential, special, or indirect damages.**

While we provide application assistance personally, through our literature and the Honeywell website, it is up to the customer to determine the suitability of the product in the application.

Specifications may change without notice. The information we supply is believed to be accurate and reliable as of this printing. However, we assume no responsibility for its use.

Honeywell

002306-7-EN IL50 GLO
August 2015
Copyright © 2015 Honeywell International Inc. All rights reserved.