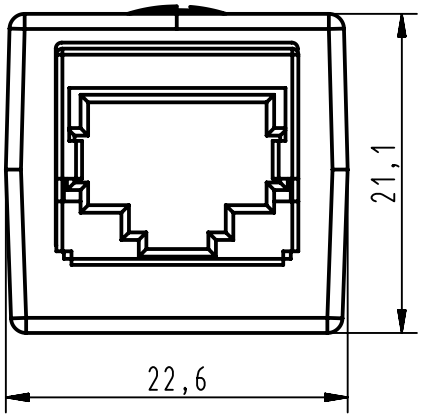

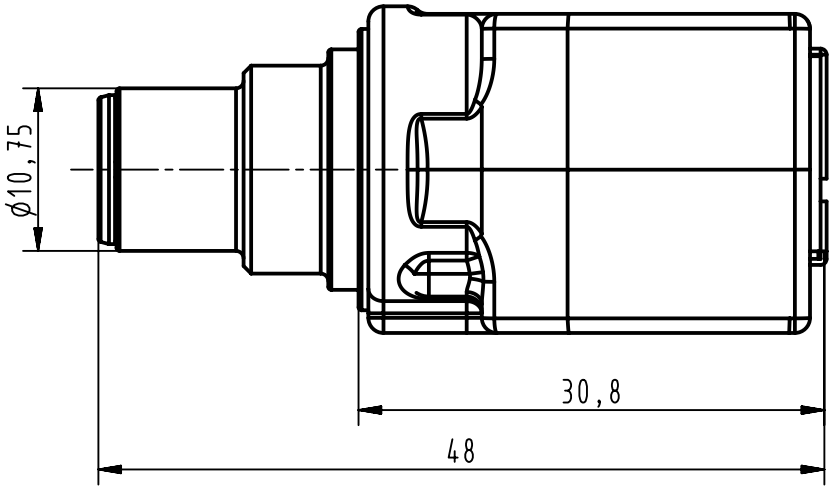

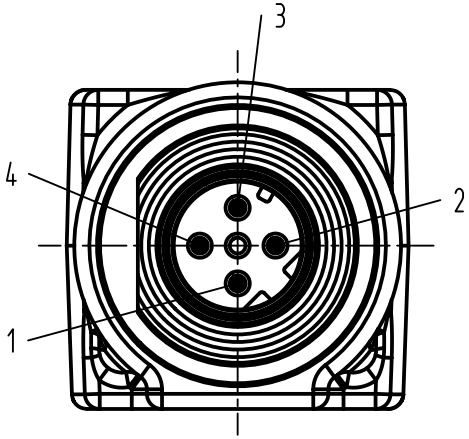

Stromlaufplan
schematic diagram

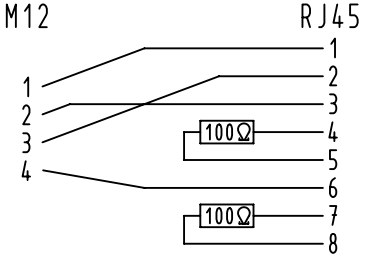

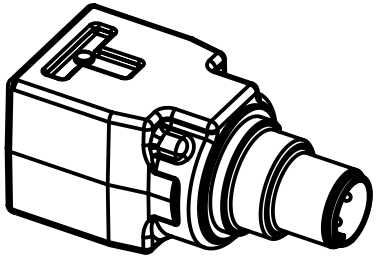

All Dimensions in mm Original Size DIN A4	Scale 2 : 1	Free size tol. ISO 2768-mK		Ref. Sub. TB 21 03 371 1420 (EC04514)	
All rights reserved Department EC PD - DE	Created by DYCKC	Inspected by HARLASS	Standardisation HOFFMANN	Date 2012-11-30	State Final Release
HARTING Electronics GmbH D-32339 Espelkamp	Title M12 male - RJ45 adapter D-coded 4 pole				Doc-Key / ECM-Nr. 100216745/UGD/004/C 500000057266
	Type TB	Number 21033711420		Rev. C	Page 1/1

A4