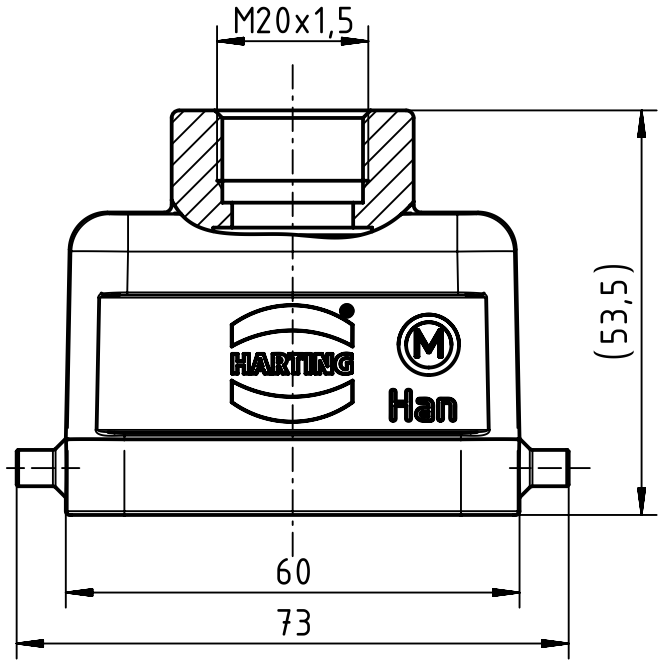

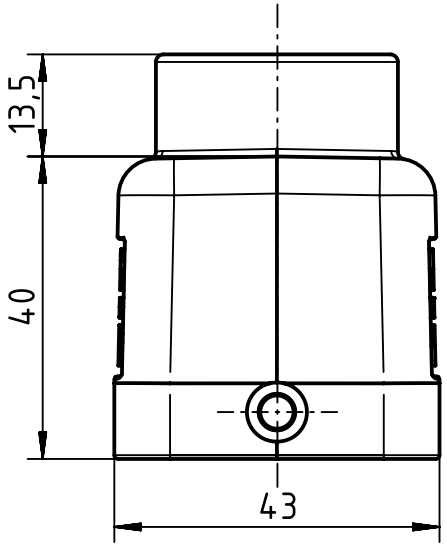

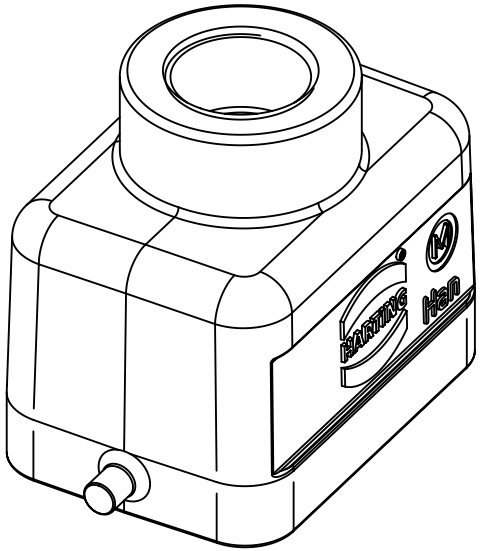

All Dimensions in mm Original Size DIN A4	Scale 1:1	Free size tol.		Ref. Sub.	
All rights reserved Department EL PD - DE	Created by FINKEV	Inspected by BERGHORN	Standardisation SCHMIDTM	Date 2015-08-18	State Final Release
HARTING Electric GmbH & Co. KG D-32339 Espelkamp	Title Han 6 B Hood Top Entry LC 2 Pegs-M20				Doc-Key / ECM-Nr. 100201263/UGD/004/C 500000093080
	Type TB	Number 19 30 006 1440		Rev. C	Page 1/1

A4