Alle Rechte vorbehalten/ *All rights reserved*

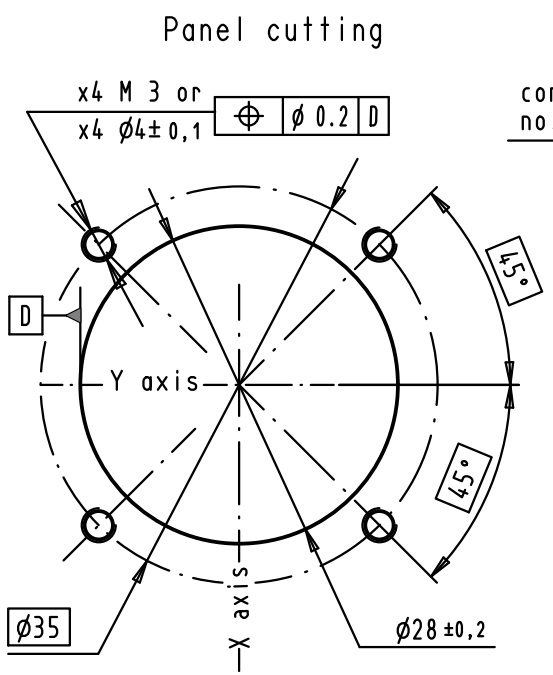

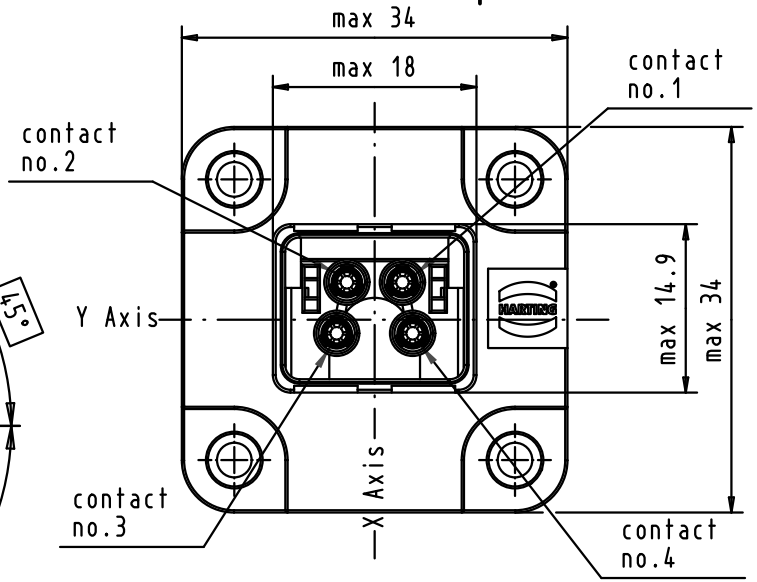

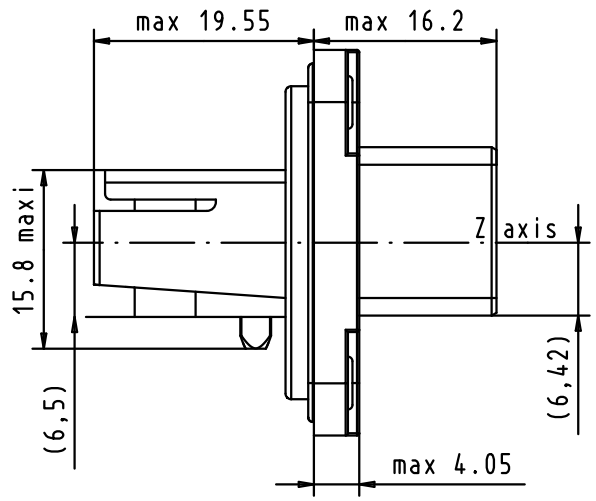

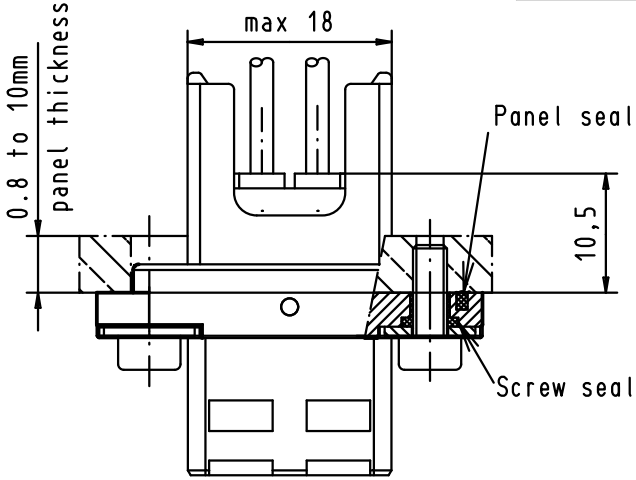

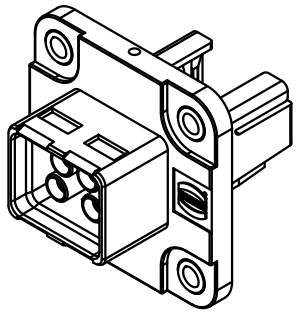

Connector pitchs on panel = 35 mm
Receptacle mating face acc. to
IEC 61076-3-106 - variant 04

Screwing by x4 M3 screws with torque 0.5 N.m
with flat washer under the screw .

x4 stranded wires 1,5 mm2

				Dat.	Name			
			Detail.	01/03/07	BD	All Dim. in mm Orig. Size DIN A 4	*push pull power easy install* IP67 PANEL FEED THROUGH 12A-48V WITH POWER FIXED CRIMP CONNECTOR	Maßstab/ *Scale* 3:2
			Insp.					
			Stand.					
33949	01/03/07	BD	HARTING EURL F-95972 Paris				TB 09 46 245 4430	Blatt/ *Page* 1/1
Mod.	Dat.	Name					Sub.	