Alle Rechte vorbehalten/ *All rights reserved*

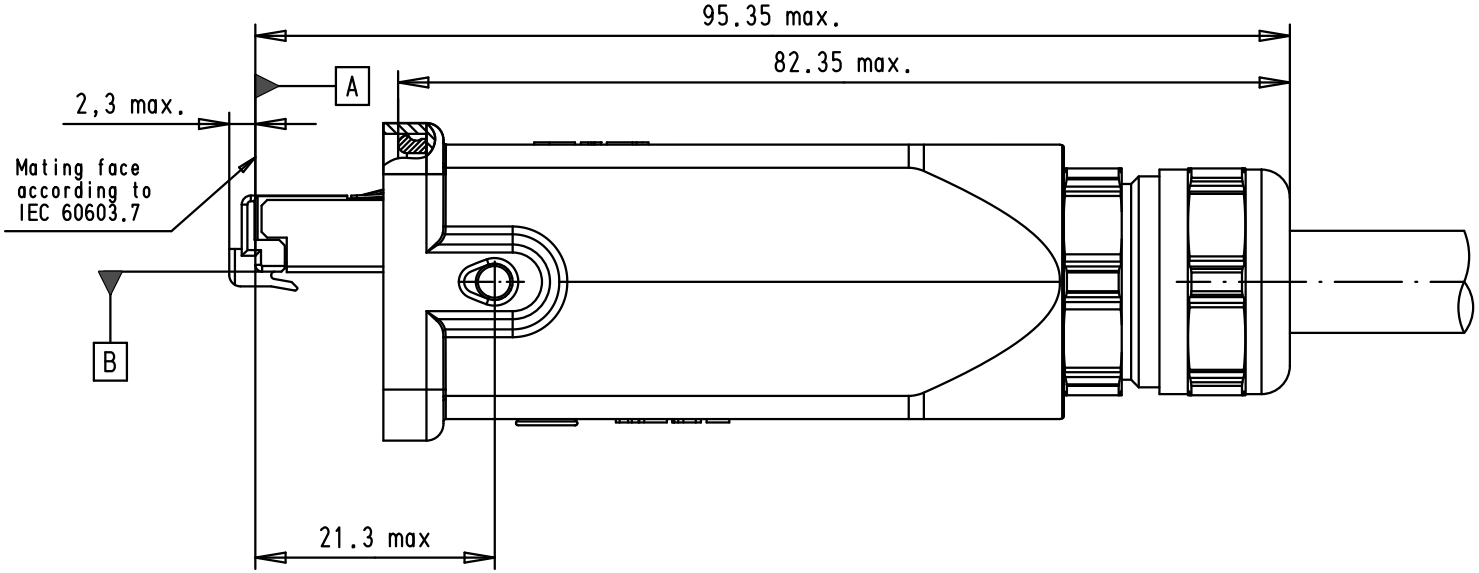


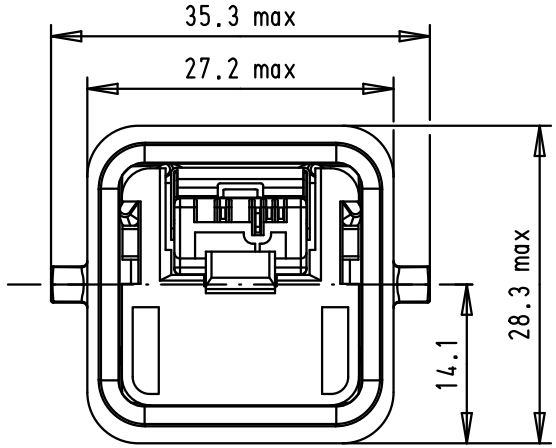


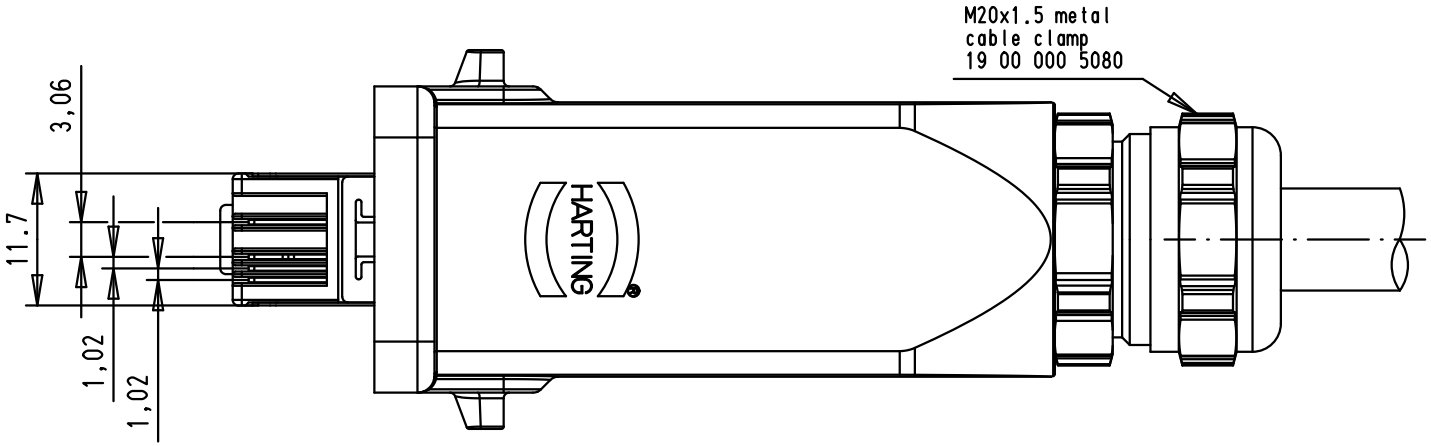


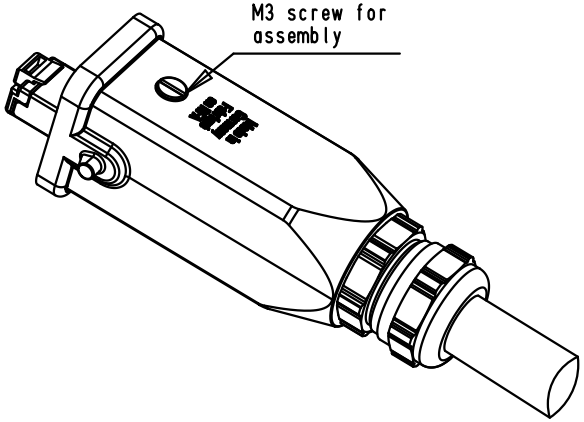


Cable diameter 5 up to 9mm
AWG 22-23 solid
AWG 22-24 stranded
with wires O.D maxi 1.6mm

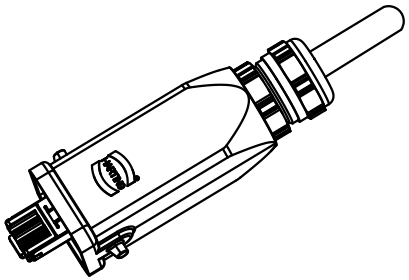

| | | | | Dat. | Name |
|---|---|---|---|---|---|
| | | | Detail. | 11/03/03 | PP |
| | | | Insp. | | |
| EC01089 | 06/01/10 | AB | Stand. | | |
| 31866 | 02/02/04 | AM | | | |
| 31394 | 11/03/03 | AM | | | |
| Mod. | Dat. | Name | | | |

All Dim. in mm
Orig. Size DIN A 4

*RJ-Industrial*
IP67 metal Han3A Plug
for 4 data cable

Maßstab/ *Scale* 1.5:1

HARTING EURL
F-95972 Paris

TB 09 45 115 1100

Blatt/ *Page* 1/1

Sub.