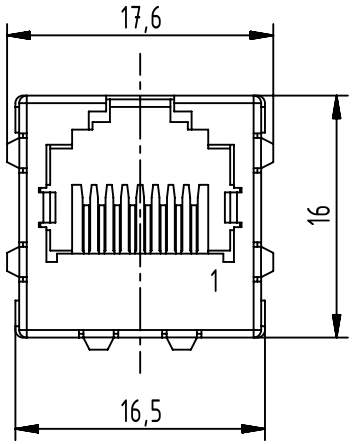

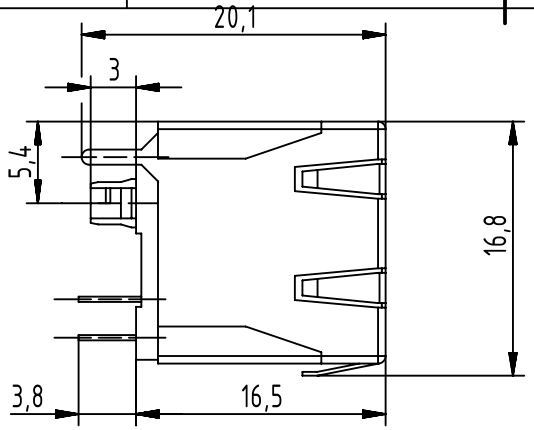

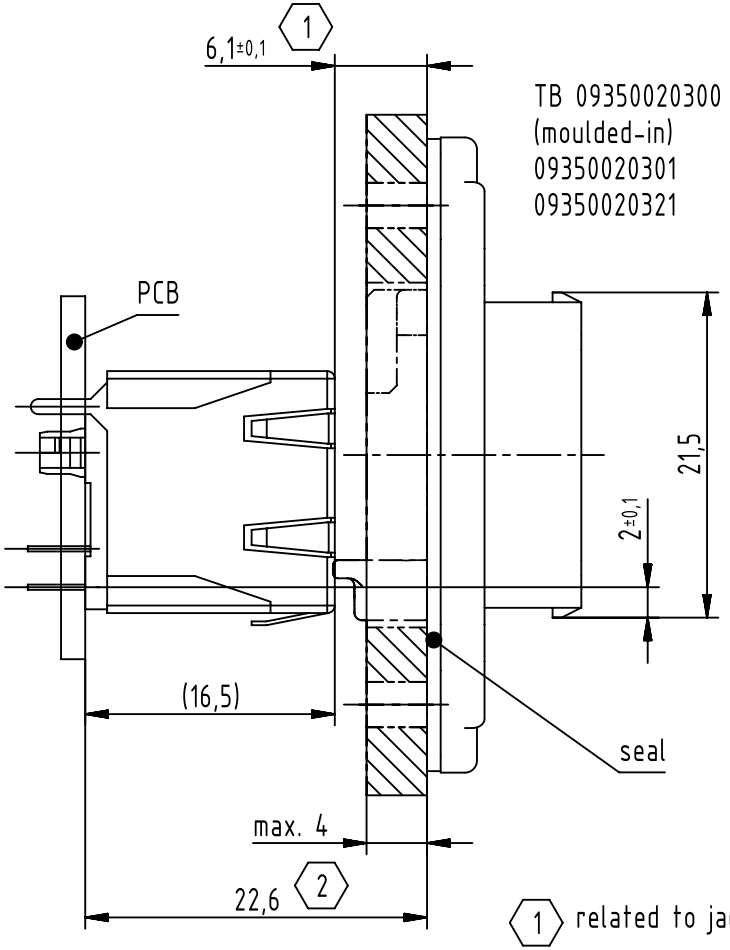

1 related to jack

2 related to PCB

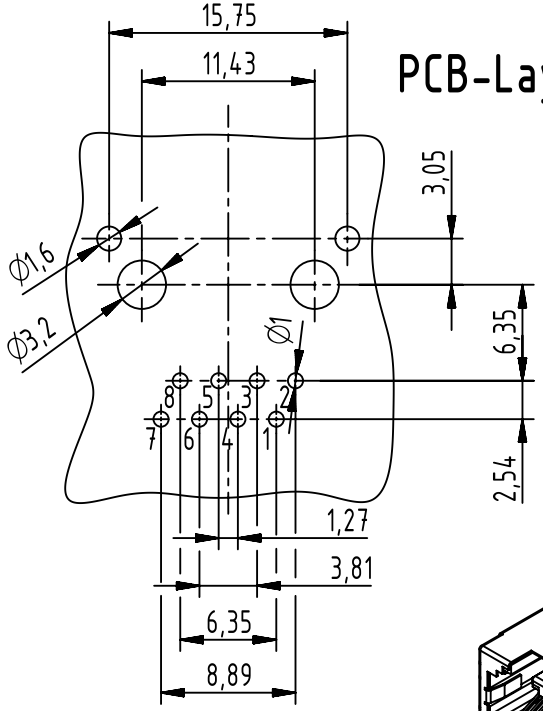

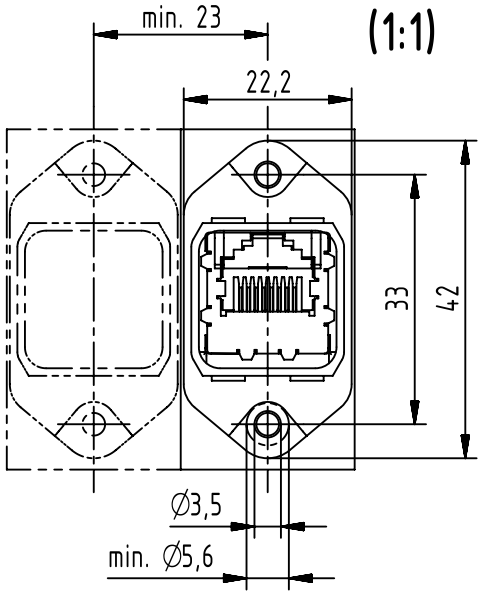

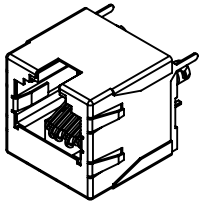

All Dimensions in mm Original Size DIN A4	Scale 2:1	Free size tol.		Ref. Sub. TB 09 35 002 2102 35503 06.05.2009	
All rights reserved Department EC PD - DE	Created by ELLERMANN	Inspected by ZWAHR	Standardisation HOFFMANN	Date 2014-03-04	State Final Release
HARTING Electronics GmbH D-32339 Espelkamp	Title Han PP V14 RJ45 jack straight				Doc-Key / ECM-Nr. 100176457/UGD/001/B 500000072234
	Type TB	Number 09350022102		Rev. B	Page 1/1

A4