panel cut out

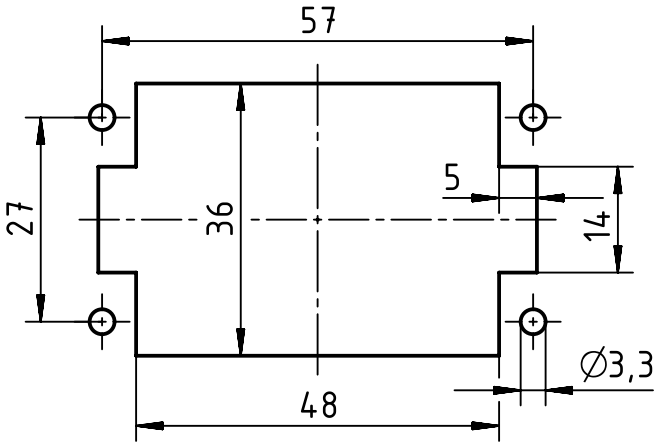

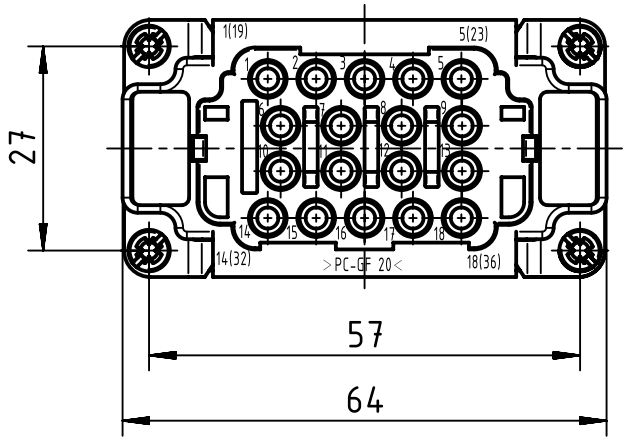

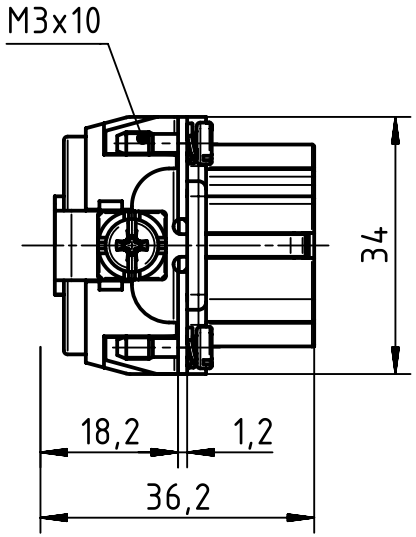

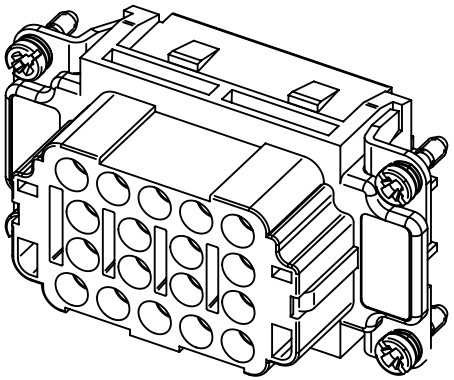

All Dimensions in mm Original Size DIN A4	Scale 1:1	Free size tol.		Ref. Sub.	
All rights reserved	Created by RULLKOETTER	Inspected by SCHNIEDER	Standardisation TIEMANNA	Date 2014-10-23	State Final Release
Department EL PD - DE	Title Han EE 18 Pos. Insert Female Crimp				Doc-Key / ECM-Nr. 100219505/UGD/006/B 500000081101
HARTING Electric GmbH & Co. KG D-32339 Espelkamp	Type TB	Number 09 32 018 3101		Rev. B	Page 1/1

A4