panel cut out

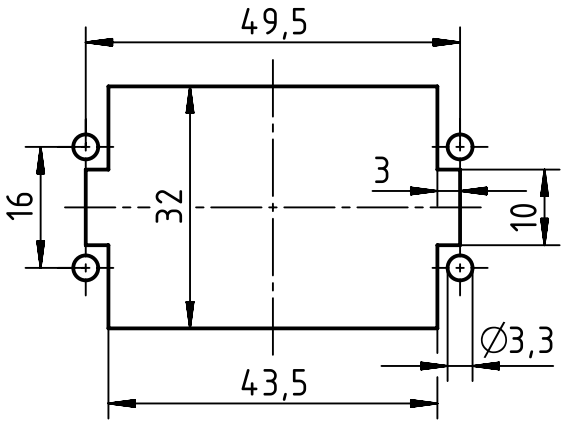

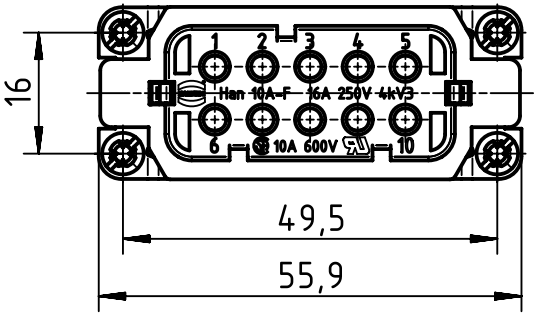

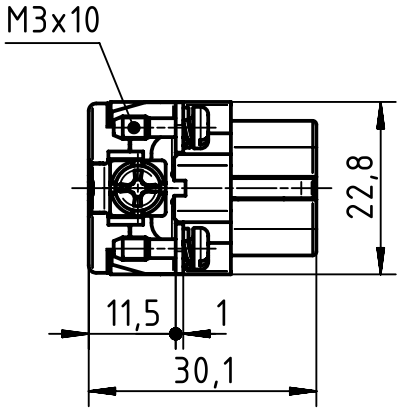

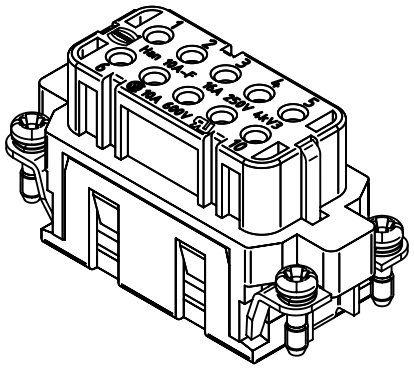

All Dimensions in mm Original Size DIN A4	Scale 1:1	Free size tol.		Ref. Sub.	
All rights reserved Department EL PD - DE	Created by SPREENB	Inspected by BERGHORN	Standardisation TIEMANNA	Date 2015-09-18	State Final Release
HARTING Electric GmbH & Co. KG D-32339 Espelkamp	Title Han A 10 Pos. F Insert Crimp				Doc-Key / ECM-Nr. 100087316/UGD/007/B 500000091602
	Type TB	Number 09 20 010 3101		Rev. B	Page 1/1

A4