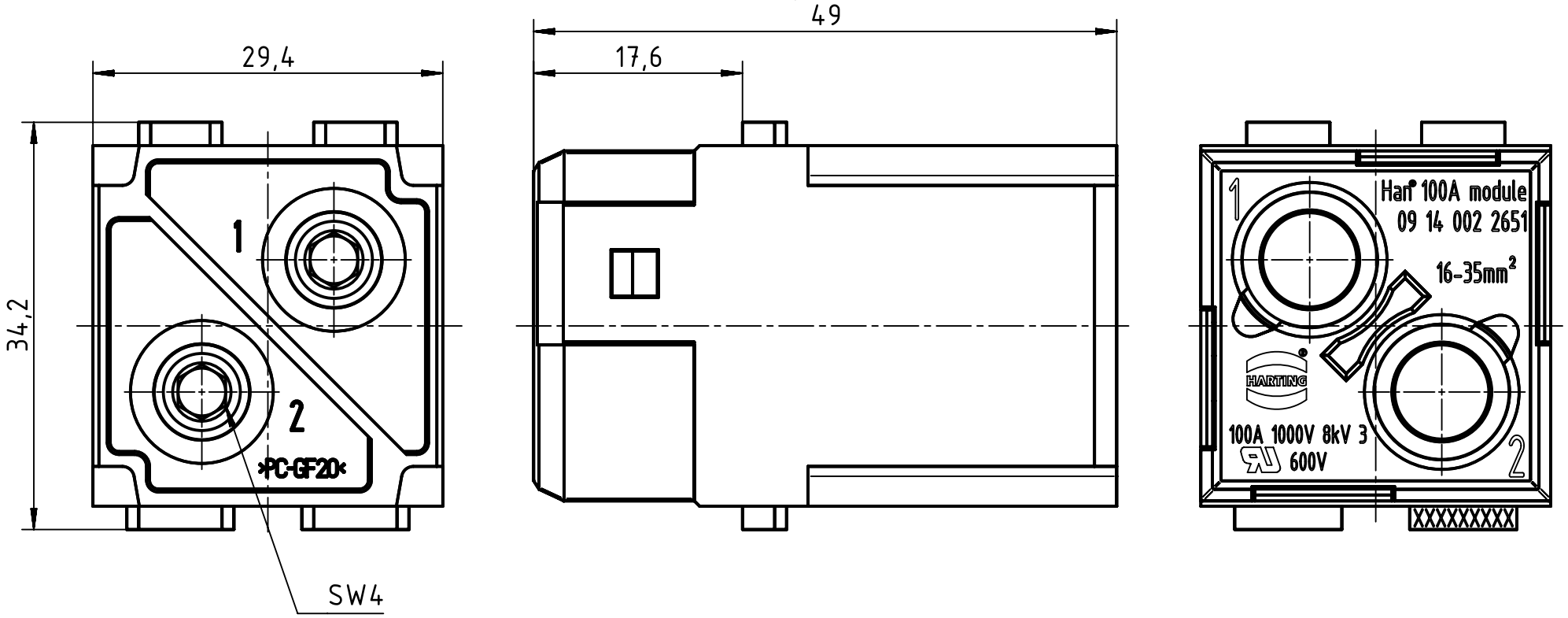

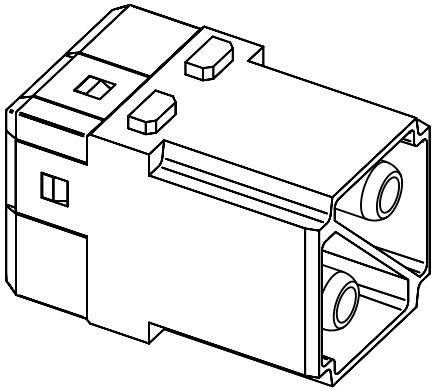

All Dimensions in mm Original Size DIN A4	Scale 2:1	Free size tol.		Ref. Sub.	
All rights reserved	Created by RULLKOETTER	Inspected by SCHNIEDER	Standardisation TIEMANNA	Date 2014-06-11	State Final Release
Department EL PD - DE	Title Han 100A axial module, male 16-35 mm²				Doc-Key / ECM-Nr. 100188780/UGD/009/A 500000074632
HARTING Electric GmbH & Co. KG D-32339 Espelkamp	Type TB	Number 09 14 002 2651		Rev. A	Page 1/1

A4