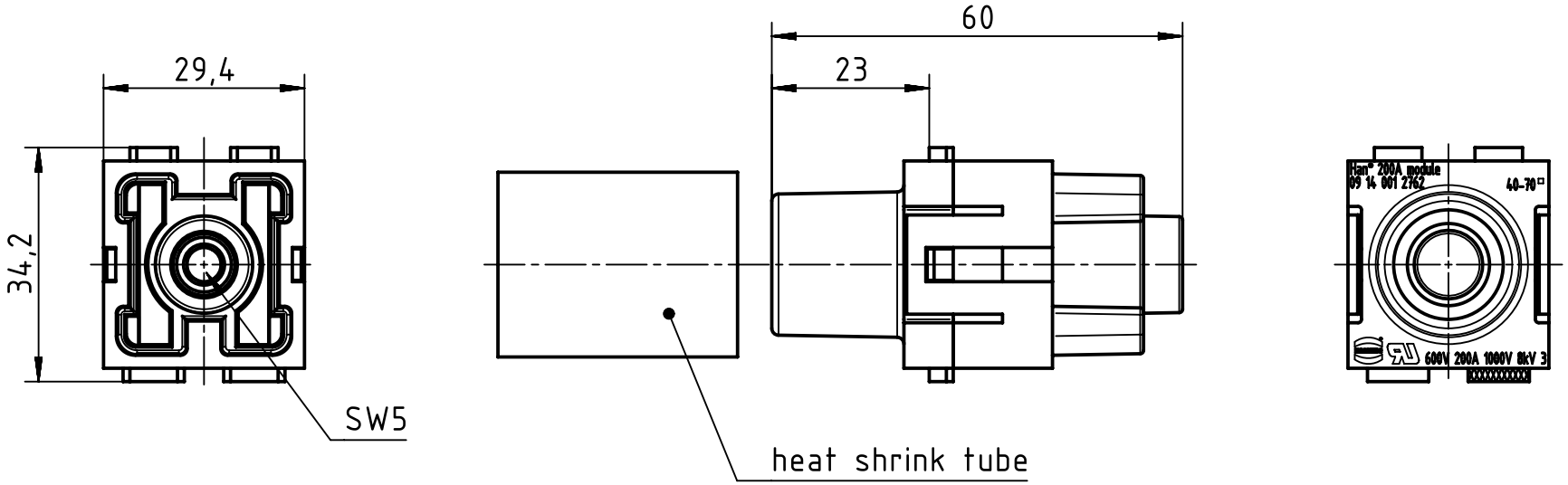

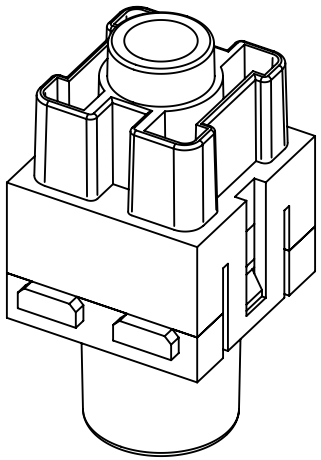

All Dimensions in mm Original Size DIN A4	Scale 1:1	Free size tol.		Ref. Sub.	
All rights reserved Department EL PD - DE	Created by RULLKOETTER	Inspected by BERGHORN	Standardisation TIEMANNA	Date 2015-08-26	State Final Release
HARTING Electric GmbH & Co. KG D-32339 Espelkamp	Title Han 200A axial module, female 40-70 mm^2				Doc-Key / ECM-Nr. 100097906/UGD/008/C 500000093653
	Type TB	Number 09 14 001 2762		Rev. C	Page 1/1

A4