SERVER TECHNOLOGY, INC
PROPRIETARY INFORMATION

THIS DOCUMENT IS THE SOLE PROPERTY OF SERVER TECHNOLOGY, INC. THE RELEASE OF DATA CONTAINED IN THIS DOCUMENT AND THE REPRODUCTION OF THIS DOCUMENT, IN WHOLE OR IN PART, WITHOUT THE WRITTEN PERMISSION OF SERVER TECHNOLOGY, INC IS PROHIBITED.

THESE COMMODITIES, TECHNOLOGY OR SOFTWARE WERE EXPORTED FROM THE UNITED STATES IN ACCORDANCE WITH THE EXPORT ADMINISTRATION REGULATIONS. DIVERSION CONTRARY TO U.S. LAW IS PROHIBITED.

RoHS COMPLIANT

REVISION HISTORY

ZONE	REV	DESCRIPTION	DATE	APPROVED
-	1	INITIAL DESIGN	5/24/2012	MAR/VB

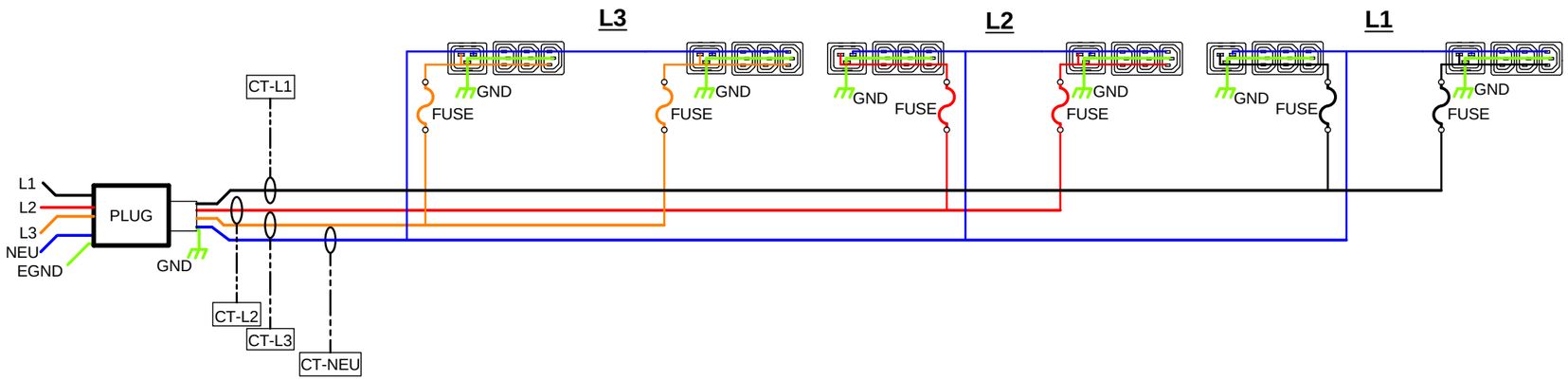

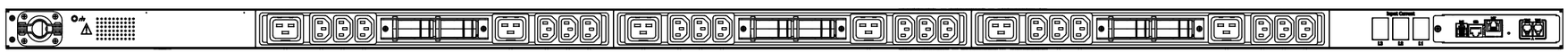

CS-24V 'MASTER'

CL-24V 'LINK'

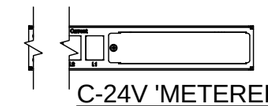

C-24V 'METERED

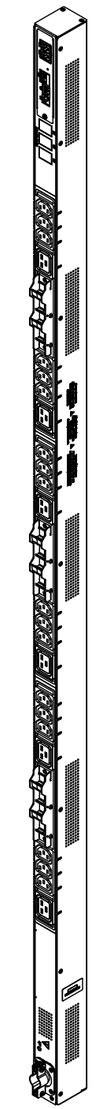

ISO VIEW

Part Number		Input			Output						
Master	Expansion	Rating, North America	GS	Input Type	Output Rating North America	GS	Outlet: North America	GS	Outlet Type	Branch Circuit: North America / GS	Phase: North America / GS
C-24V4-P16MA			230/400V 3W+N+PE, 50/60Hz; 16A	IEC 60309 16A		230V, 50/60Hz; <= 48A		6xC19 <= 16A each, 18xC13 <= 10A each	IEC 60320 C13 / C19	/ L1a, L1b, L2a, L2b, L3a, L3b <= 16A	/ L1, L2, L3 <= 16A
C-24V4-P32MA			230/400V 3W+N+PE, 50/60Hz; 32A	IEC 60309 32A		230V, 50/60Hz; <= 96A		6xC19 <= 16A each, 18xC13 <= 10A each	IEC 60320 C13 / C19	/ L1a, L1b, L2a, L2b, L3a, L3b <= 16A	/ L1, L2, L3 <= 32A
CS-24V4-P16MA	CL-24V4-P16MA		230/400V 3W+N+PE, 50/60Hz; 16A	IEC 60309 16A		230V, 50/60Hz; <= 48A		6xC19 <= 16A each, 18xC13 <= 10A each	IEC 60320 C13 / C19	/ L1a, L1b, L2a, L2b, L3a, L3b <= 16A	/ L1, L2, L3 <= 16A
CS-24V4-P32MA	CL-24V4-P32MA		230/400V 3W+N+PE, 50/60Hz; 32A	IEC 60309 32A		230V, 50/60Hz; <= 96A		6xC19 <= 16A each, 18xC13 <= 10A each	IEC 60320 C13 / C19	/ L1a, L1b, L2a, L2b, L3a, L3b <= 16A	/ L1, L2, L3 <= 32A
CS-24V52311A1	CL-24V52311A1	240/416V 3W+N+PE, 50/60Hz; 16A		NEMA L22-20P	240V, 50/60Hz; <= 48A		6xC19 <= 16A each, 18xC13 <= 12A each		IEC 60320 C13 / C19	L1a, L1b, L2a, L2b, L3a, L3b <= 20A /	L1, L2, L3 <= 16A /
CS-24V53311A1	CL-24V53311A1	240/416V 3W+N+PE, 50/60Hz; 16A		IEC 60309 16A	240V, 50/60Hz; <= 48A		6xC19 <= 16A each, 18xC13 <= 12A each		IEC 60320 C13 / C19	L1a, L1b, L2a, L2b, L3a, L3b <= 20A /	L1, L2, L3 <= 16A /
CS-24V54311A1	CL-24V54311A1	240/416V 3W+N+PE, 50/60Hz; 24A		IEC 60309 24A	240V, 50/60Hz; <= 72A		6xC19 <= 16A each, 18xC13 <= 12A each		IEC 60320 C13 / C19	L1a, L1b, L2a, L2b, L3a, L3b <= 20A /	L1, L2, L3 <= 24A /
CS-24V5Z311A1	CL-24V5Z311A1	240/416V 3W+N+PE, 50/60Hz; 24A		NEMA L22-30P	240V, 50/60Hz; <= 72A		6xC19 <= 16A each, 18xC13 <= 12A each		IEC 60320 C13 / C19	L1a, L1b, L2a, L2b, L3a, L3b <= 20A /	L1, L2, L3 <= 24A /
CS-24V4J313A1	CL-24V4J313A1		230/400V 3W+N+PE, 50/60Hz; 16A	IEC 60309 16A		230V, 50/60Hz; <= 48A		6xC19 <= 16A each, 18xC13 <= 10A each	IEC 60320 C13 / C19	/ L1a, L1b, L2a, L2b, L3a, L3b <= 16A	/ L1, L2, L3 <= 16A
CS-24V4K313A1	CL-24V4K313A1		230/400V 3W+N+PE, 50/60Hz; 32A	IEC 60309 32A		230V, 50/60Hz; <= 96A		6xC19 <= 16A each, 18xC13 <= 10A each	IEC 60320 C13 / C19	/ L1a, L1b, L2a, L2b, L3a, L3b <= 16A	/ L1, L2, L3 <= 32A
CS-24V52313A1	CL-24V52313A1	240/416V 3W+N+PE, 50/60Hz; 16A		NEMA L22-20P	240V, 50/60Hz; <= 48A		6xC19 <= 16A each, 18xC13 <= 12A each		IEC 60320 C13 / C19	L1a, L1b, L2a, L2b, L3a, L3b <= 20A /	L1, L2, L3 <= 16A /
CS-24V53313A1	CL-24V53313A1	240/416V 3W+N+PE, 50/60Hz; 16A		IEC 60309 16A	240V, 50/60Hz; <= 48A		6xC19 <= 16A each, 18xC13 <= 12A each		IEC 60320 C13 / C19	L1a, L1b, L2a, L2b, L3a, L3b <= 20A /	L1, L2, L3 <= 16A /
CS-24V54313A1	CL-24V54313A1	240/416V 3W+N+PE, 50/60Hz; 24A		IEC 60309 24A	240V, 50/60Hz; <= 72A		6xC19 <= 16A each, 18xC13 <= 12A each		IEC 60320 C13 / C19	L1a, L1b, L2a, L2b, L3a, L3b <= 20A /	L1, L2, L3 <= 24A /
CS-24V5Z313A1	CL-24V5Z313A1	240/416V 3W+N+PE, 50/60Hz; 24A		NEMA L22-30P	240V, 50/60Hz; <= 72A		6xC19 <= 16A each, 18xC13 <= 12A each		IEC 60320 C13 / C19	L1a, L1b, L2a, L2b, L3a, L3b <= 20A /	L1, L2, L3 <= 24A /

TOLERANCES
(UNLESS OTHERWISE SPECIFIED)
LINEAR DIMENSIONS:
.X = ± .500
.XX = ± .300
.XXX = ± .130

ANGULAR DIMENSIONS:
X = ± 1°
X.X = ± .5°
X.XX = ± .25°

UNLESS OTHERWISE SPECIFIED
* INTERPRET DRAWING IAW ASME Y14.100-2000
* DIMENSIONING & TOLERANCING IAW ASME Y14.5M-2007
* REMOVE ALL BURRS AND SHARP EDGES .2 R MAX
* DIMENSIONS ARE IN MILLIMETERS
* DIMENSIONAL LIMITS APPLY AFTER PLATING/COATING.

DO NOT SCALE DRAWING
THIRD ANGLE PROJECTION

SYMBOLS
Q # = CRITICAL DIM.
S = COSMETIC SURFACE

MATERIAL:

FINISH:

SERVER TECHNOLOGY, INC.
1040 Sandhill Drive Reno, NV 89521

DRAWING TITLE:
FUNCTIONAL BLOCK WIRING DIAGRAM
SMART, V24, 400V 3PH WYE, 6BR

SIZE	CAGE CODE	DWG NO.	REV
B	049V0	495-0350-18	1

SCALE: NONE

SHEET 1 OF 1