PROLABS – JNP-QSFP-40G-LR4-C

40GBd SFP+ LR4 Extended Distance Transceiver

JNP-QSFP-40G-LR4-C Overview

PROLABS's JNP-QSFP-40G-LR4-C QSFP+ LR4 optical transceivers are based on Ethernet IEEE P802.3ba standard and SFF 8436 standard. The QSFP+ transceiver converts 4 inputs channels of 10Gb/s electrical data to 4 CWDM optical signals, and multiplexes them into a single channel for 40Gb/s optical transmission. Reversely, on the receiver side, the module optically de-multiplexes a 40Gb/s input into 4 CWDM channels signals, and converts them to 4 channel output electrical data.
The central wavelengths of the 4 CWDM channels are 1271, 1291, 1311 and 1331 nm as members of the CWDM wavelength grid defined in ITU-T G694.2.

Product Features

- 4 CWDM Lanes MUX/DEMUX design
- Up to 11.2Gbps data rate per wavelength
- QSFP+ MSA compliant
- Up to 10km Transmission
- Duplex LC connector
- Built-in digital diagnostic functions
- Up to 10km on SMF
- Maximum 3.5W operation power
- RoHS Compliance
- Class 1 Laser
- Operating temperature range: 0℃ to 70℃.

Applications

- 40G Ethernet
- Infiniband interconnects

Ordering Information

Part Number	*Description*
JNP-QSFP-40G-LR4-C	40G QSFP+ 1310nm LC Connectors, Up to 10km on SMF, with DOM function.

General Specifications

Parameter	*Symbol*	*Min*	*Typ*	*Max*	*Unit*	*Remarks*
Bit Error Rate	BER			10^{-12}		
Operating Temperature	T_{OP}	0		70	℃	Case temperature
Storage Temperature	T_{STO}	−20		85	℃	Ambient temperature
Input Voltage	V_{CC}	3.14	3.3	3.47	V	For electrical power
Maximum Voltage	V_{MAX}	−0.5		3.6	V	

Link Distances

Parameter	*Fiber Type*	*Distance Range (Km)*
40 GBd	9/125um SMF	10

Optical Characteristics – Transmitter

Parameter	*Symbol*	*Min*	*Typ*	*Max*	*Unit*	*Remarks*
Total Output Optical Power	P_T			8.3	dBm	Average
Average Launch Power (Each Lane)	P	-7		2.3	dBm	
Optical Center Wavelength	λ_C	1264.5	1271	1277.5	nm	L0 Lane
		1284.5	1291	1297.5	nm	L1 Lane
		1304.5	1311	1317.5	nm	L2 Lane
		1324.5	1331	1337.5	nm	L3 Lane
Optical Modulation Amplitude, Each Lane	OMA	-4		3.5	dB	
Extinction Ratio	ER	3.5			dB	
Spectral Width (– 20 dB)	$\Delta\lambda$			0.6	nm	
Side Mode Suppression Ratio	SMSR	30			dB	
Relative Intensity Noise	RIN			-128	dB/Hz	
Transmitter Dispersion Penalty	TDP			2.3	dB	
Optical Return Loss Tolerance				20	dB	
Transmitter Eye Mask						Compliant with IEEE 802.3ba
Launch Power of OFF Transmitter	P_{OUT_OFF}			-30	dBm	Average

Optical Characteristics – Receiver

Parameter	*Symbol*	*Min*	*Typ*	*Max*	*Unit*	*Remarks*
Optical Center Wavelength	λ_C	1264.5	1271	1277.5	nm	L0 Lane
		1284.5	1291	1297.5	nm	L1 Lane
		1304.5	1311	1317.5	nm	L2 Lane
		1324.5	1331	1337.5	nm	L3 Lane
Optical Input Power, Each Lane	P_{IN}	-13.7		2.3	dBm	Average, Informative
Damage Threshold	P	3.3			dBm	
Receiver Sensitivity (OMA), each Lane	$R_{X\ SEN1}$			3.5	dBm	
Stressed Receiver Sensitivity in OMA, each Lane				-9.9	dBm	
Receiver Reflectance	TR_{RX}			-26	dB	
LOS Assert	LOS_A	-25			dBm	
LOS De-Assert	LOS_D			-16	dBm	
LOS Hysteresis		0.5			dB	

Electrical Characteristics – Transmitter

Parameter	*Symbol*	*Min*	*Typ*	*Max*	*Unit*	*Remarks*
Input differential impedance	R_{IN}		100		Ω	Non condensing
Single ended data input swing	V_{IN_PP}	90		600	mV	
Transmit disable voltage	V_D	Vcc-1.3		V_{CC}	V	
Transmit enable voltage	V_{EN}	V_{EE}		V_{EE}+0.8	V	

Electrical Characteristics – Receiver

Parameter	*Symbol*	*Min*	*Typ*	*Max*	*Unit*	*Remarks*
Single ended data output swing	V_{OUT_PP}	150	300	425	mV	
Data output rise time (20%-80%)	T_R		30		ps	
Data output fall time (20%-80%)	T_F		30		ps	
LOS Fault	V_{LOS_Fault}	Vcc-1.3		V_{CC_HOST}	V	
LOS Normal	V_{LOS_normal}	V_{EE}		V_{EE}+0.5	V	

Block Diagram of Transceiver

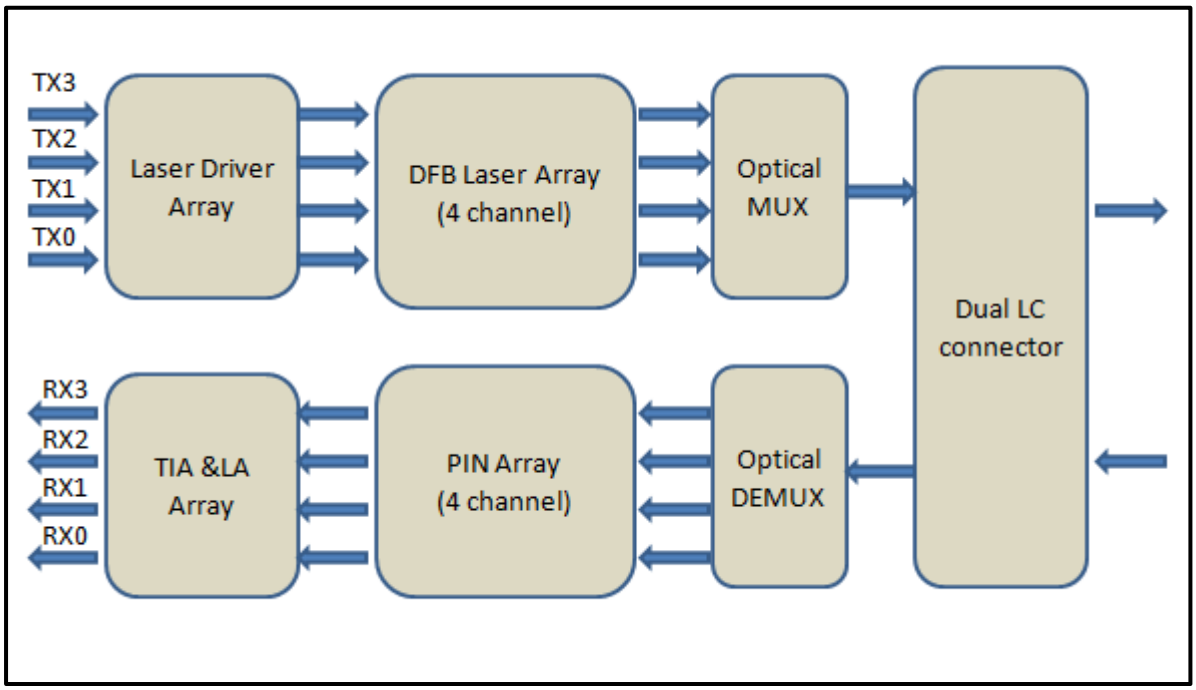

This product converts the 4-channel 10Gb/s electrical input data into CWDM optical signals (light), by a driven 4- wavelength Distributed Feedback Laser (DFB) array. The light is combined by the MUX parts as a 40Gb/s data, propagating out of the transmitter module from the SMF. The receiver module accepts the 40Gb/s CWDM optical signals input, and de-multiplexes it into 4 individual 10Gb/s channels with different wavelength. Each wavelength light is collected by a discrete photo diode, and then outputted as electric data after amplified by a TIA.

Dimensions

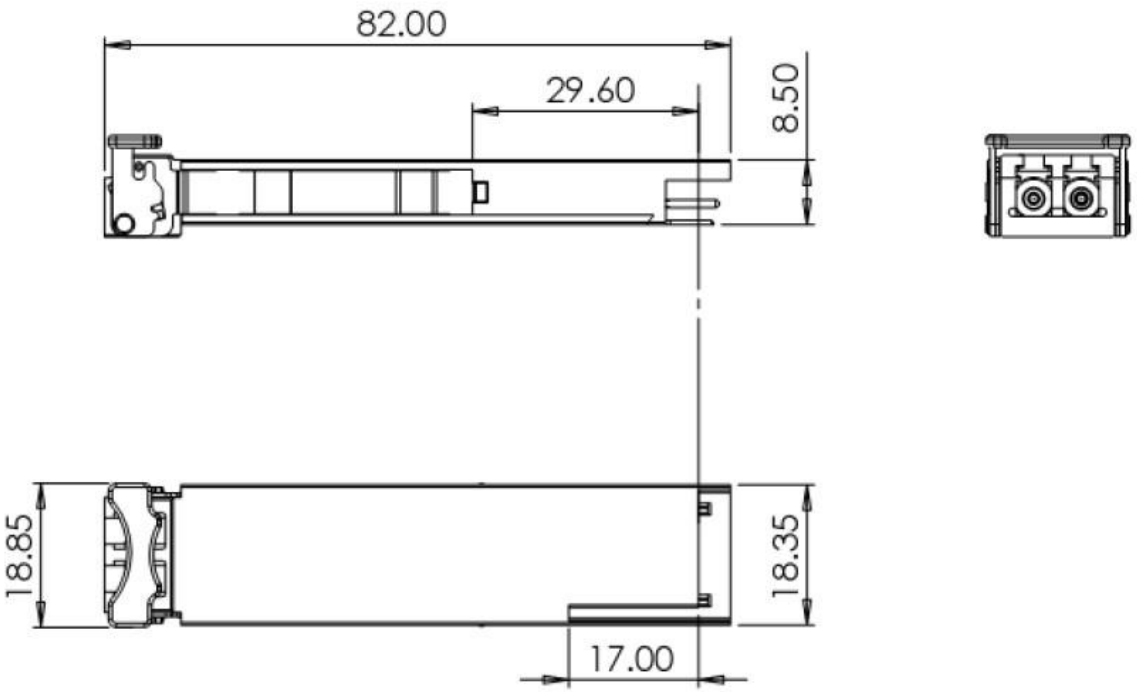

ALL DIMENSIONS ARE ±0.2mm UNLESS OTHERWISE SPECIFIED
UNIT: mm

PCB Layout Recommendation

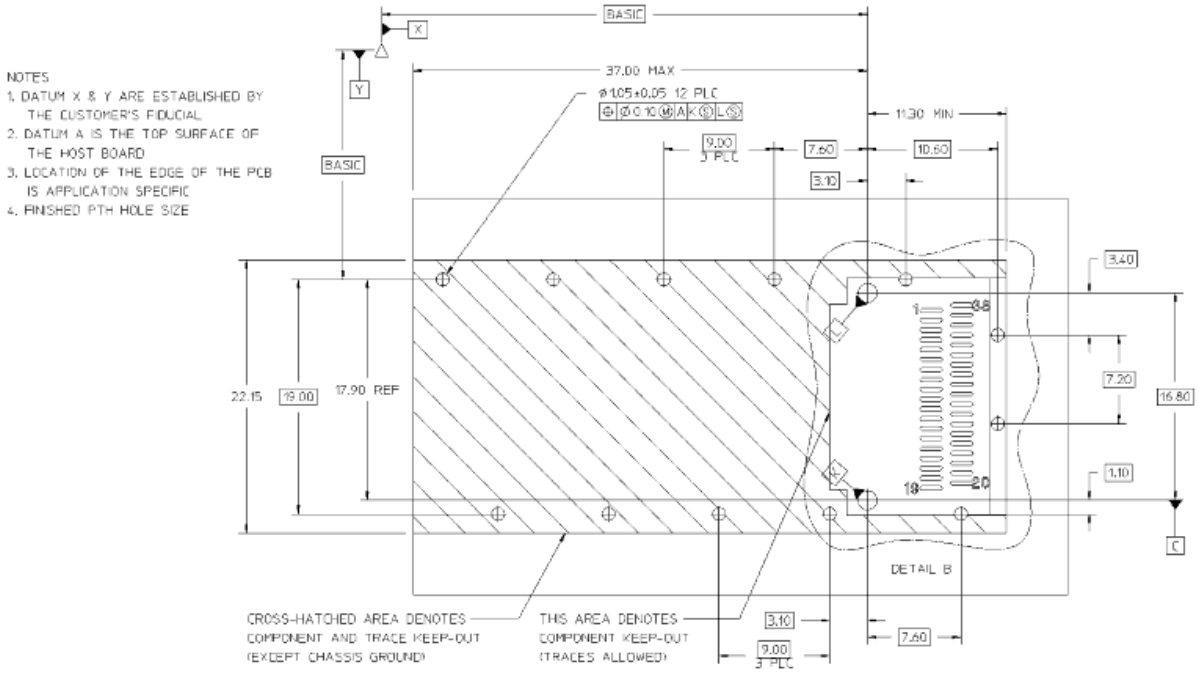

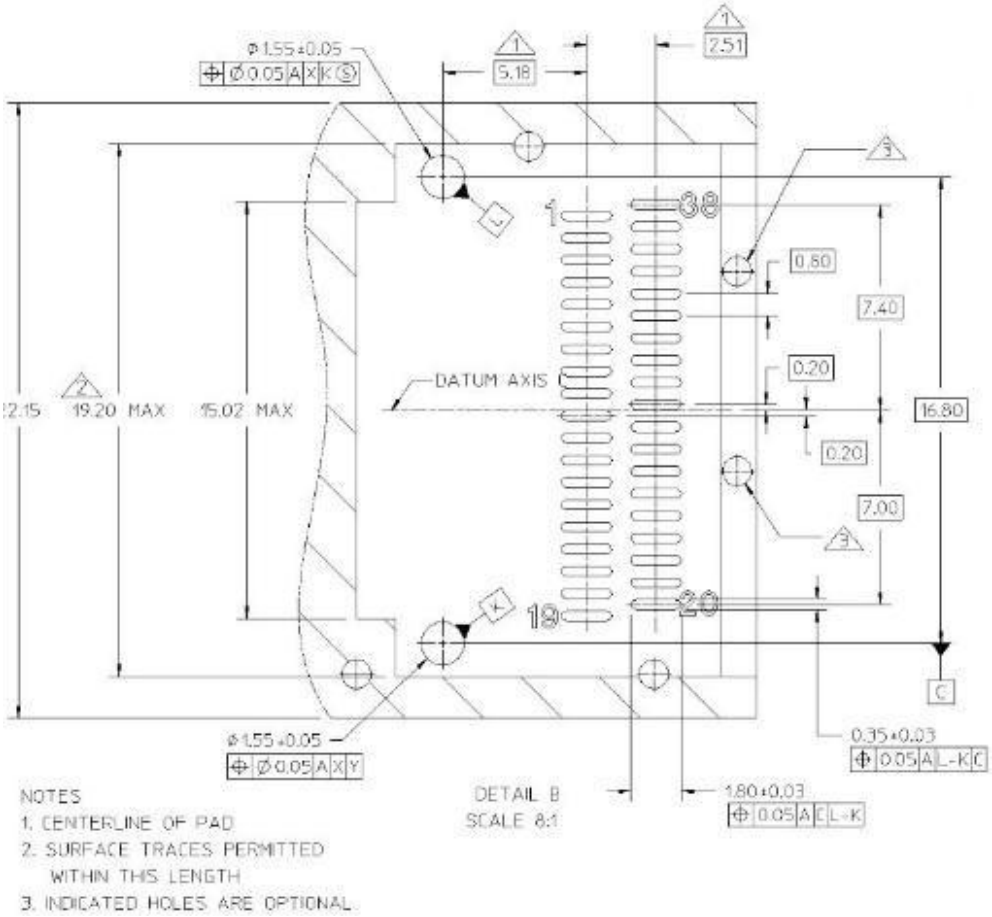

Electrical Pad Layout

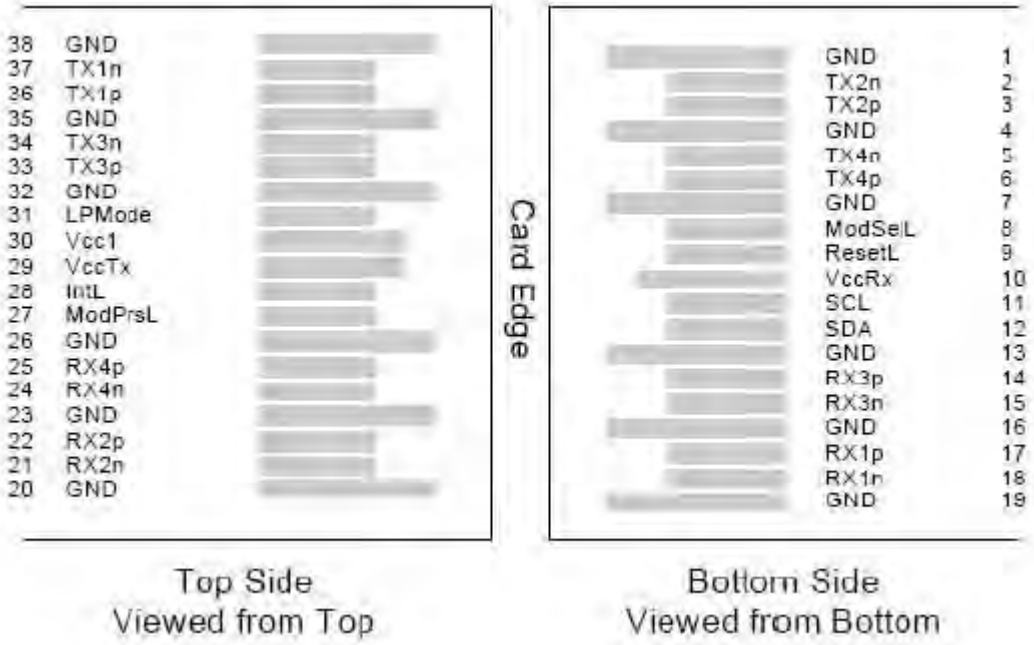

Pin Assignment

PIN#	*Symbol*	*Description*	*Remarks*
1	GND	Ground	
2	Tx2n	Transmitter Inverted Data Input	
3	Tx2p	Transmitter Non-Inverted Data Input	
4	GND	Ground	
5	Tx4n	Transmitter Inverted Data Input	
6	Tx4p	Transmitter Non-Inverted Data Input	
7	GND	Ground	
8	ModSelL	Module Select	
9	ResetL	Module Reset	
10	V_{cc} RX	+3.3V Power Supply Receiver	
11	SCL	2-wire serial interface clock	
12	SDA	2-wire serial interface data	
13	GND	Ground	
14	Rx3p	Receiver Non-Inverted Data Output	
15	Rx3n	Receiver Inverted Data Output	
16	GND	Ground	
17	Rx1p	Receiver Non-Inverted Data Output	
18	Rx1n	Receiver Inverted Data Output	
19	GND	Ground	
20	GND	Ground	
21	Rx2n	Receiver Inverted Data Output	
22	Rx2p	Receiver Non-Inverted Data Output	
23	GND	Ground	
24	Rx4n	Receiver Inverted Data Output	
25	Rx4p	Receiver Non-Inverted Data Output	
26	GND	Ground	
27	ModPrsL	Module Present	
28	IntL	Interrupt	
29	V_{cc} TX	+3.3V Power Supply transmitter	
30	V_{cc1}	+3.3V Power Supply	
31	LPMode	Low Power Mode	
32	GND	Ground	
33	Tx3p	Transmitter Non-Inverted Data Input	
34	Tx3n	Transmiiter Inverted Data Input	
35	GND	Ground	
36	Tx1p	Transmitter Non-Inverted Data Input	
37	Tx1n	Transmiiter Inverted Data Input	
38	GND	Ground	

References

1. IEEE standard 802.3ba. IEEE Standard Department, 2010.
2. QSFP+ 10Gbs 4X PLUGGABLE TRANSCEIVER – SFF-8436