PROLABS – QSFP-40G-CSR4-C

40Gb/s QSFP+ Short Wavelength (850nm) Optical Transceiver

QSFP-40G-SR4-C Overview

PROLABS's QSFP-40G-CSR4-C QSFP+ optical transceiver is a parallel fiber optical module with four independent optical transmit and receive channels. It combines the higher density attractions of parallel modules with some of the key advantages normally associated with SFP+ based modules.

Product Features

- Supports 41.2 Gb/s aggregate bit rates
- Compliant with QSFP+ MSA
- Compliant with SFF-8436
- Four independently addressable transmit and receive channels
- Uncooled 4x10Gb/s 850nm transmitter
- Differential, internally AC-coupled data I/Os
- Electrically z-pluggable, allowing port population on demand.
- Electrically hot-pluggable
- Single 3.3V power supply
- Built-in Digital Diagnostic functions
- Optical connectivity via industry standard MPO/MTP terminated fiber ribbon
- Operating temperature range: 0℃ to 70℃.

Applications

- High-speed interconnects within and between switches, routers and transport equipment
- Serve-Server Clusters, Super-computing interconnections
- Proprietary backplanes
- Interconnects rack-to-rack, shelf-to-shelf, board-to-board, board-to-optical backplane
- 10GBASE-SR & 40GBASE-CSR4 applications
- Infiniband SDR, DDR and QDR applications

Ordering Information

Part Number	***Description***
QSFP-40G-CSR4-C	40Gb/s QSFP+ Transceiver, 4 channels x 10.3125 Gbps. 300m over MMF.

General Specifications – Absolute Maximum Ratings

Parameter	Symbol	Min	Typ	Max	Unit	Remarks
Operating Case Temperature	T_{OP}	– 5		75	℃	
Storage Temperature	T_{STO}	– 40		100	℃	
ESD resistance	V_{ESD}			+/- 500	V	Note 1
Supply Voltage	V_{CC}	– 0.5		3.63	V	Note 2
Voltage on any pin	V_{PIN}	– 0.3		V_{cc}+0.5	V	
Differential Input Voltage Amplitude	*DIVA*			1600	mV_{p-p}	Note 3
Relative Humidity (Non-condensing)	*MOS*	5		95	%	

Note 1: All pins withstand 500V based on Human Body Model, JEDEC JESD22-A114-D.
Note 2: Applies to all input supply voltages. Stresses above those listed under "Absolute Maximum Ratings" may cause permanent damage to the device. These are stress ratings only and functional operation of the devices at those or any other conditions above those indicated in the Recommended Operating Conditions of this specification is NOT implied. Also note that exposure to maximum rating conditions for extended periods of time may affect device reliability.
Note 3: Differential input voltage amplitude is peak to peak value.

General Specifications – Recommended Operating Conditions

Parameter	Symbol	Min	Typ	Max	Unit	Remarks
Power Supply Voltage	V_{CC}	3.135	3.3	3.465	V	Note 1
Power Consumption	P_D		0.8	1.5	W	
Operating Case Temperature	T_{CASE}	0		70	℃	
Differential Input Voltage Amplitude	*DIVA*	200		1200	mV_{p-p}	
Signaling Rate (per channel)	*SR*	2.5		10.3125	Gbps	Note 2
Power Supply Noise	*PSN*			50	mV_{p-p}	Note 3

Note 1: Applies to all input supply voltages
Note 2: Data patterns are to have maximum run lengths and DC balance shifts no worse than that of a pseudo random bit sequence of length 231-1 (PRBS-31).
Note 3: Power supply noise is defined at the supply side of the recommended filter for all VCC supplies over the frequency range of 1 kHz to 10.3125 GHz with the recommended power supply filter in place.

Optical Characteristics – Transmitter

V_{CC}=3.135V to 3.465V, T_C=0℃ to 70℃

Parameter	Symbol	Min	Typ	Max	Unit	Remarks
Output Optical Power	P_{out}			– 1	dBm	Note 1
Optical Center Wavelength	λ_C	840		860	nm	
Optical Modulation Amplitude	*OMA*	0.13			mW	Note 2
Extinction Ratio	*ER*	3			dB	
Spectral Width	$\Delta\lambda$			0.65	nm	Note 3
Relative Intensity Noise(OMA)	*RIN*			– 130	dB/Hz	
Optical Eye Mask	Compliant to Standard					
Launch Power of OFF Transmitter	P_{OUT_OFF}			– 30	dBm	

Note 1: The output optical power is compliant with IEC 60825-1 Amendment 2, Class 1M Accessible Emission Limits.
Note 2: OMA are peak to peak values
Note 3: Spectral width is measured as defined in EIA/TIA-455-127 Spectral Characterization of Multimode Laser Diodes.

Optical Characteristics – Receiver

V_{CC}=3.135V to 3.465V, T_C=0℃ to 70℃

Parameter	Symbol	Min	Typ	Max	Unit	Remarks
Optical Center Wavelength	λ_C	840		860	nm	
Average Input Power	P_{IN}	– 9.5		2.4	dBm	Note 1
Optical Return Loss	*ORL*			12	dB	Note 2
Signal Detect Assert	P_{SA}			– 10	dBm	
Signal Detect De-Assert	P_{SD}	– 30			dBm	

Note 1: Average optical input power for a channel is measured for a BER of 10-12. The BER is measured using a fast rise/fall time source with low RIN and the other channels operating with incident power of > 1 dBm average power.
Note 2: Return loss is measured as defined in TIA/EIA-455-107A Determination of Component Reflectance or Link/System Return Loss Using a Loss Test Set.

Electrical Characteristics – Transmitter

V_{CC}=3.135V to 3.465V, T_C=0℃ to 70℃

Parameter	*Symbol*	*Min*	*Typ*	*Max*	*Unit*	*Remarks*
Differential Input Return Loss	*DIRL*		Compliant to Standard		dB	
Differential Input Voltage Amplitude (Peak to Peak)	ΔV_{IN}	200		1200	mV_{P-P}	Note 1
Differential Input Impedance	Z_{IN}	80		120	'Ω	

Note 1: Differential input voltage is defined as the peak to peak value of the differential voltage between TxNp and TxNn. Data inputs are CML compatible

Electrical Characteristics – Receiver

V_{CC}=3.135V to 3.465V, T_C=0℃ to 70℃

Parameter	*Symbol*	*Min*	*Typ*	*Max*	*Unit*	*Remarks*
Receiver Mask Compliance			Compliant to Standard			Note 1
Output Differential Load Impedance	Z_L	80		120	'Ω	
Output Differential Return Loss	DRL_{OUT}		Compliant to Standard		dB	Note 2
Receiver J2 Jitter	$J2_{RX}$			0.42	UI	
Receiver J9 Jitter	$J9_{RX}$			0.65	UI	

Note 1: Eye Mask is compliant to IEEE 802.3ba: (X1, X2) = (0.29, 0.5) UI, (Y1, Y2) = (150, 425) mV with a hit ration of $5.0x10^{-5}$ per sample

Note 2: Output differential return loss is compliant to IEEE 802.3ba: Return Loss(f) > 12 – 2xsqrt(f); 0.01<f<4.11 and $6.3-13log_{10}(f/5.5)$; 4.11<f<11.1

Product Dimensions

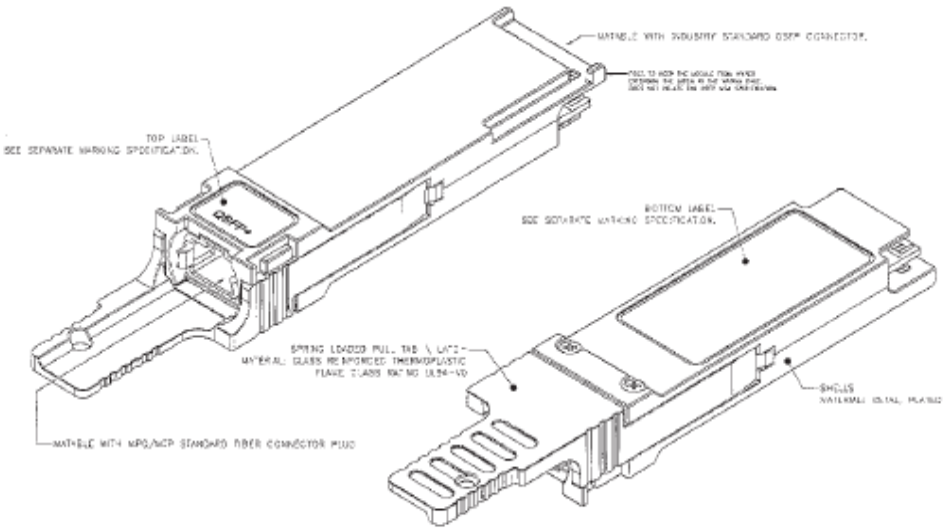

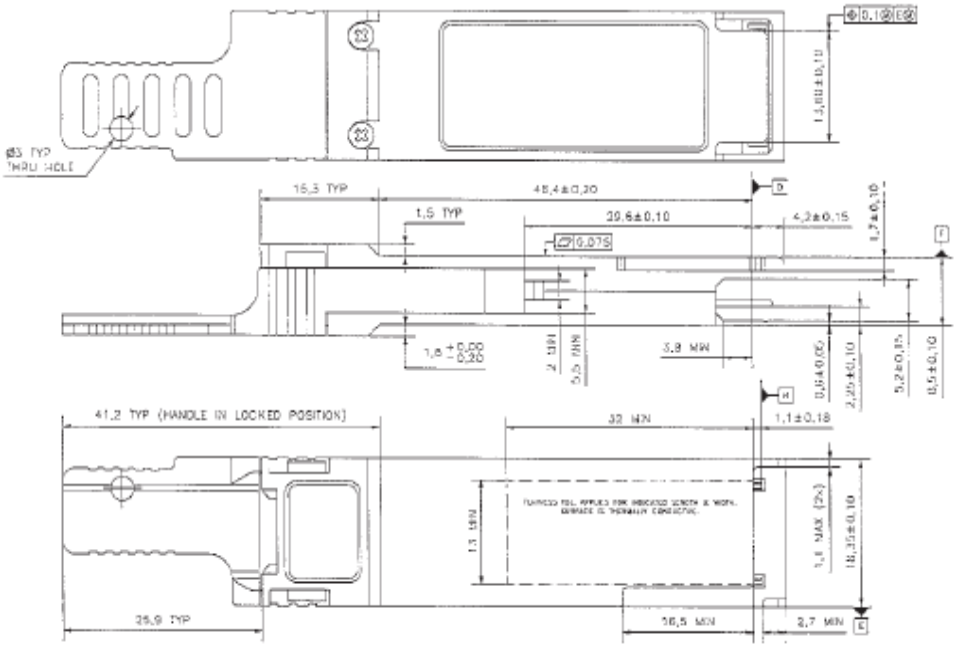
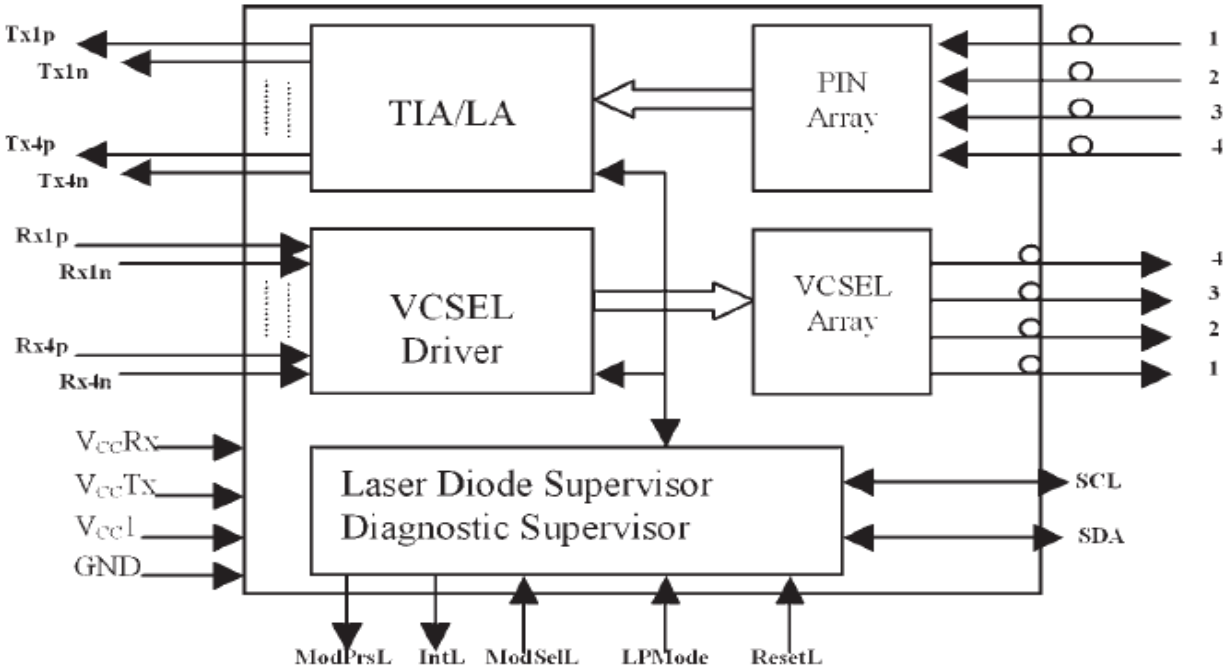
Block Diagram of Transceiver