THIS COPY IS PROVIDED ON A RESTRICTED BASIS AND IS NOT TO BE USED IN ANY WAY DETRIMENTAL TO THE INTERESTS OF PANDUIT CORP.

PANDUIT P/N	WEIGHT
NRD6	3.5 LBS/ EACH (1.6 kg/ EACH)

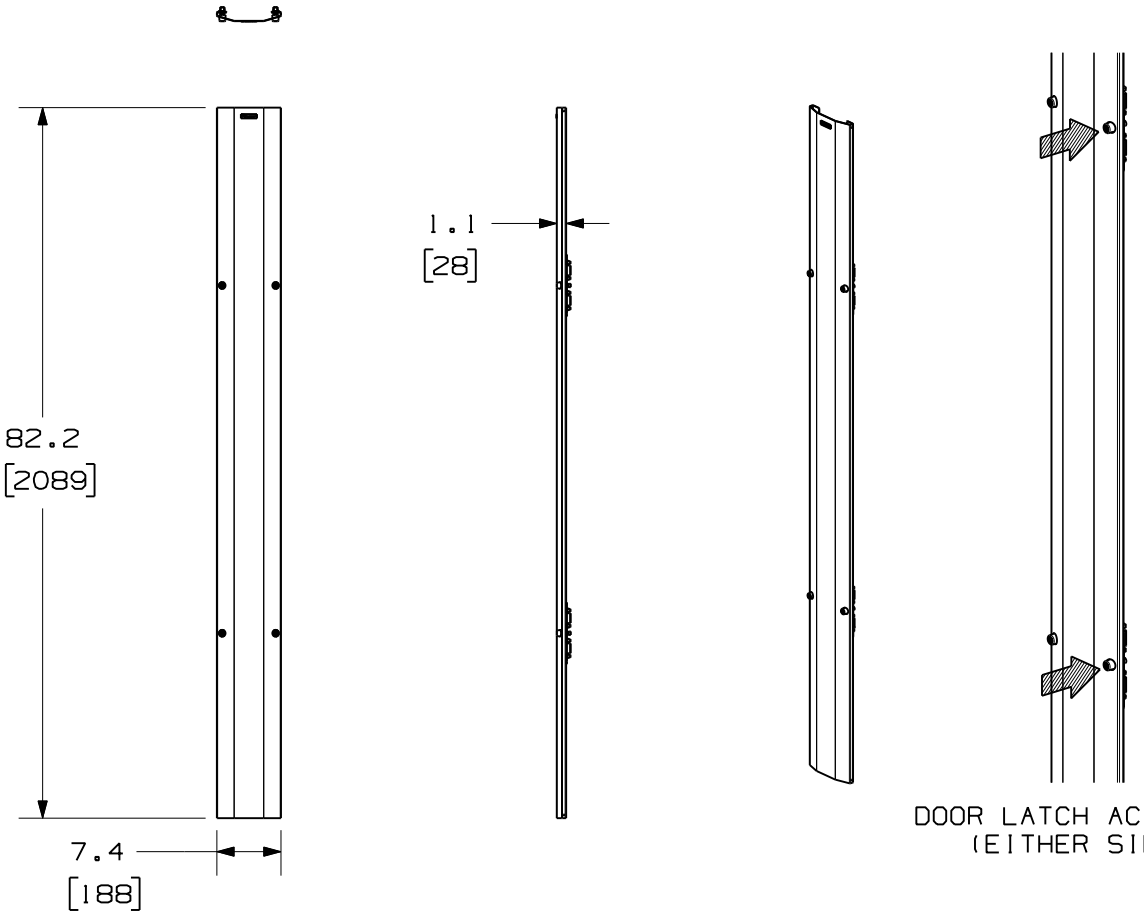

NOTES:
1. VISIT OUR ON-LINE CATALOG AT WWW.PANDUIT.COM FOR A CURRENT LIST OF PRODUCTS APPLICABLE FOR USE WITH THIS PART.
2. DOORS OPEN TO THE LEFT OR THE RIGHT.
3. DIMENSIONS IN PARENTHESIS ARE METRIC.
4. ALL DIMENSIONS ARE REFERENCE ONLY.
5. ALUMINUM WITH BLACK POWDER COAT FINISH.
6. COMPONENTS:
   1- 6" DOOR

REV	DATE	BY	CHK	DESCRIPTION	ECN - R	CUST	SUP	OTH
00A	3-9-09	BAME		DRAWING RELEASED	V10661AH-DC			

MODEL FILENAME: V10661AH_00A

CAD FILENAME/LAYERS: V10661AH_DC/00A

PANDUIT CORP. TINLEY PARK, ILLINOIS

NETRUNNER HIGH CAPACITY DOOR, 6" WIDE
(NRD6)
CUSTOMER DRAWING

UNLESS OTHERWISE SPECIFIED, DIMENSIONAL TOLERANCES ARE:
(.X) ± (.XXX) ±
(.XX) ± ANGLES ±

UNLESS OTHERWISE SPECIFIED, ALL DIMENSIONS ARE GIVEN IN INCHES, THIRD ANGLE PROJECTION.

DRAWN BY: BAME

DATE: 3-9-09

CHK'D:

MAT'L: ALUMINUM

SCALE: NONE

DRAWING NO.: V10661AH-DC

DWG SIZE: A