THIS COPY IS PROVIDED ON A RESTRICTED BASIS AND IS NOT TO BE USED IN ANY WAY DETRIMENTAL TO THE INTERESTS OF PANDUIT CORP.

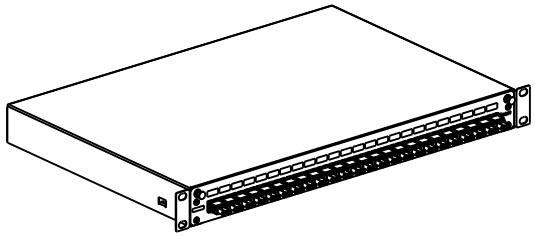

PART NUMBER	ADAPTER COLOR	SPLIT SLEEVE TYPE	APPLICATION	WEIGHT
NKFDIW24EIDLC	ELECTRIC IVORY	PHOS BRONZE	62.5/125 OM1	6.5 LBS (2948g)
NKFDIW24BLDLC	BLACK	PHOS BRONZE	50/125 OM2	
NKFDIW24AQDLC	AQUA	ZIRCONIA	50/125 OM3	
NKFDIW24BUDLC	BLUE	ZIRCONIA	9/125 OS2	

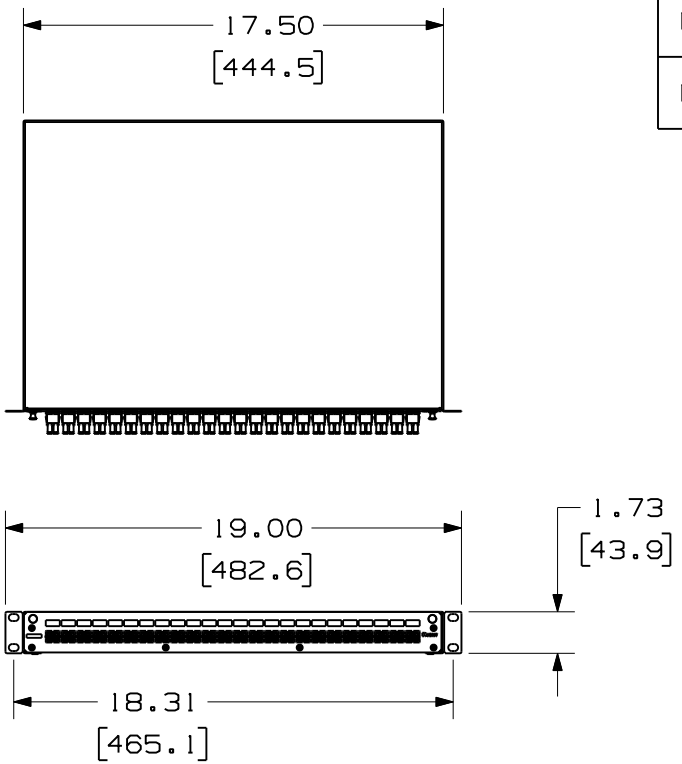

NOTES:
1. SEE CATALOG FOR ADDITIONAL PART NUMBER SUFFIXES TO INDICATE COLOR AND/OR PACKAGE QUANTITY.
2. SEE CATALOG FOR COMPLETE LIST OF PARTS APPLICABLE FOR USE WITH THIS PART.
3. DIMENSIONS IN BRACKETS ARE METRIC [mm].
4. PART INCLUDES:
   (1) ENCLOSURE PRELOADED WITH (24) DUPLEX MULTIMODE OR SINGLEMODE LC ADAPTERS.
   (1) HARDWARE KIT CONTAINING:
      (4) M6 x 12mm SCREWS (10029-01)
      (4) #12-24 x 1/2" SCREWS (34466-22
      (2) FIBER SLACK SPOOL (RFMS1)
      (1) 2 FIBER ENTRY GROMMETS (00466-02)
      (1) PG-11 GLAND (00001-141)
      (2) PAN-TY CABLE TIES (PLT2S-M0)
      (1) FIBER CAUTION LABEL
      (1) LASER WARNING LABEL

REV	DATE	BY	CHK	DESCRIPTION	ECN - R	CUST	SUP	OTH
R	12-14-09	EFK		RELEASED TO PRODUCTION	01302-51			

NETKEY FIBER DRAWER FOR 24 DUPLEX LC
CUSTOMER DRAWING

PANDUIT™ CORP.
TINLEY PARK, ILL 60477

THIRD ANGLE PROJECTION

ALL DIMENSIONS ARE GIVEN IN INCHES, UNLESS OTHERWISE SPECIFIED.
DIMENSIONAL TOLERANCES ARE:
(.X) (.XXX)±.010 [0.3]
(.XX)±.03 [0.8] ANGLES

DRAWN BY: EFK
DATE: 12-14-09
CHK'D:
MATERIAL: SEE NOTES

DRAWING FILENAME: M01302AA_DC_24DLC/00A
SCALE: NONE
PART NO.: NKFDIW24**DLC
DRAWING NO.: 01302-51
SIZE: A