THIS COPY IS PROVIDED ON A RESTRICTED BASIS AND IS NOT TO BE USED IN ANY WAY DETRIMENTAL TO THE INTERESTS OF PANDUIT CORP.

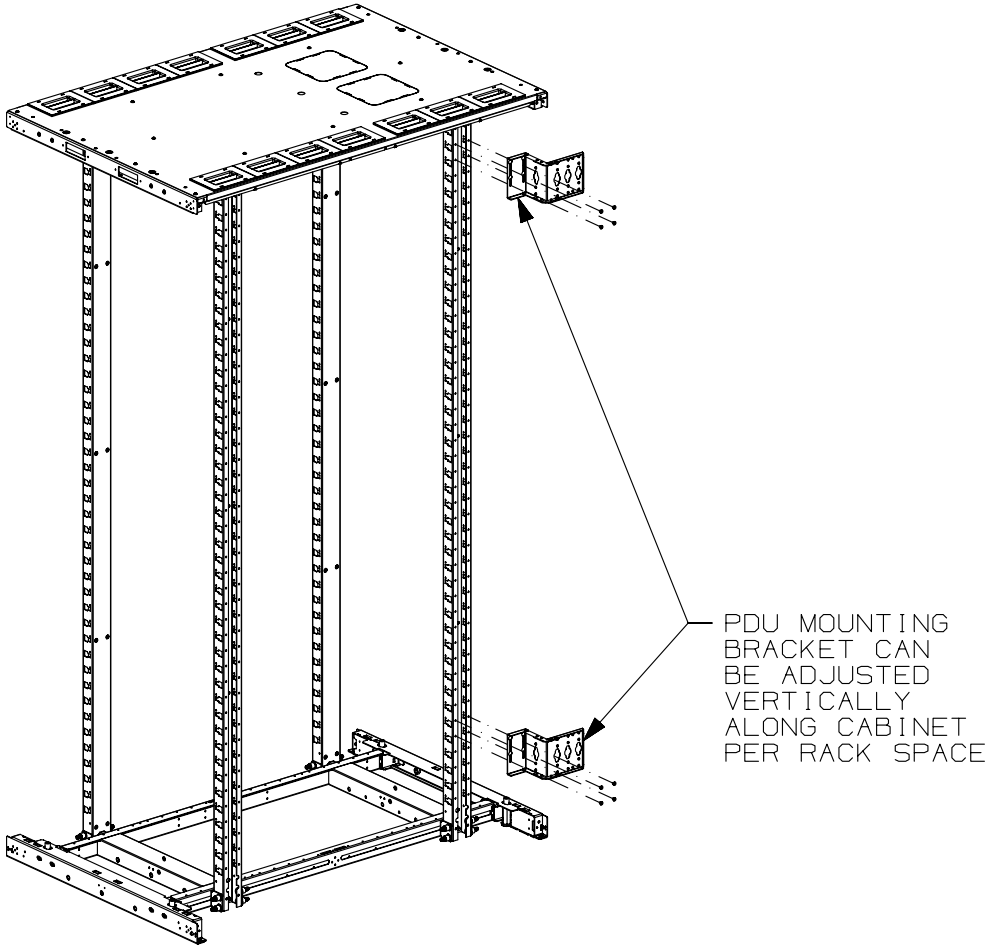

APPLICATION VIEW
CABINET NOT INCLUDED

PANDUIT P/N	WEIGHT
NVPDUB	2.0 Kg/EACH 4.4 LBS/EACH

NOTES:
1. VISIT OUR ON-LINE CATALOG AT WWW.PANDUIT.COM FOR A LIST OF CURRENT PARTS APPLICABLE FOR USE WITH THIS PRODUCT.
2. PRIMARY DIMENSIONS ARE IN MILLIMETERS (mm).
3. PARTS SUPPLIED:
   (2)- POU BRACKETS
   (8)- TORX SCREWS
   (1)- INSTRUCTION SHEET

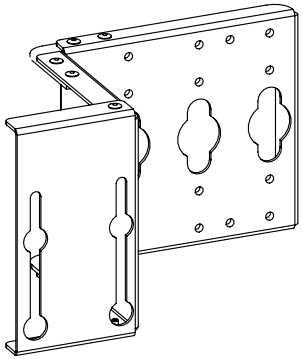

ISO VIEW

REV	DATE	BY	CHK	APR	DESCRIPTION	ECN
00A	9-18-13	PBS			RELEASED TO PRODUCTION	11V223GS-DC

TITLE
NVPDUB NET ACCESS N-TYPE POU BRACKET FG
CUSTOMER DRAWING

ITEM REVISION NAME: 11V223GS/00.PRT
DATASET FILE NAME: 11V223GS_DC/00A.PRT

UNLESS OTHERWISE SPECIFIED, DIMENSIONAL TOLERANCES ARE:

INCHES		METRIC - MILLIMETER		ANGLE
X.X	+/- 0.06	X.	+/- 1.5	
X.XX	+/- 0.03	X.X	+/- 0.8	+/- 1°
X.XXX	+/- 0.015	X.XX	+/- 0.4	

THIRD ANGLE PROJECTION

MATERIAL/COLOR:

DRAWING NUMBER: 11V223GS-DC

DRAWN BY	DATE	CHK	SCALE		SIZE
PBS	9-18-13		NONE	SHT 1 OF 2	A

THIS COPY IS PROVIDED ON A RESTRICTED BASIS AND IS NOT TO BE USED IN ANY WAY DETRIMENTAL TO THE INTERESTS OF PANDUIT CORP.

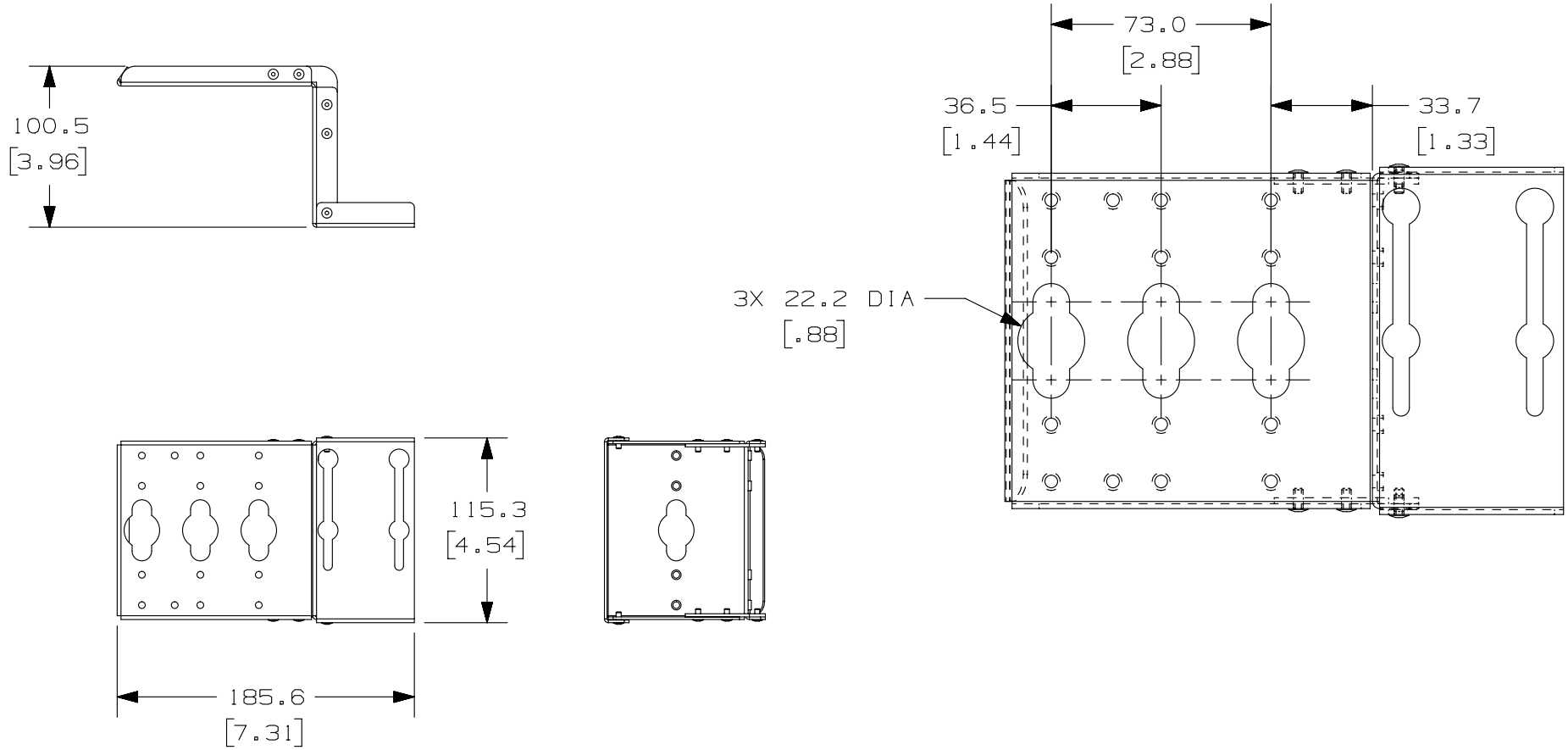

REV	DATE	BY	CHK	APR	DESCRIPTION	ECN
00A	9-18-13	PBS			SEE SHEET 1 OF 2 FOR REVISIONS	11V223GS-DC

TITLE
NVPDUB NET ACCESS N-TYPE POU BRACKET FG

CUSTOMER DRAWING

ITEM REVISION NAME
11V223GS/00.PRT

DATASET FILE NAME
11V223GS_DC/00A.PRT

UNLESS OTHERWISE SPECIFIED, DIMENSIONAL TOLERANCES ARE:

INCHES		METRIC - MILLIMETER		ANGLE
X.X	+/- 0.06	X.	+/- 1.5	
X.XX	+/- 0.03	X.X	+/- 0.8	+/- 1°
X.XXX	+/- 0.015	X.XX	+/- 0.4	

THIRD ANGLE PROJECTION

MATERIAL/COLOR:

DRAWING NUMBER:
11V223GS-DC

DRAWN BY	DATE	CHK	SCALE		SIZE
PBS	9-18-13		NONE	SHT 2 OF 2	A