THIS COPY IS PROVIDED ON A RESTRICTED BASIS AND IS NOT TO BE USED IN ANY WAY DETRIMENTAL TO THE INTERESTS OF PANDUIT CORP.

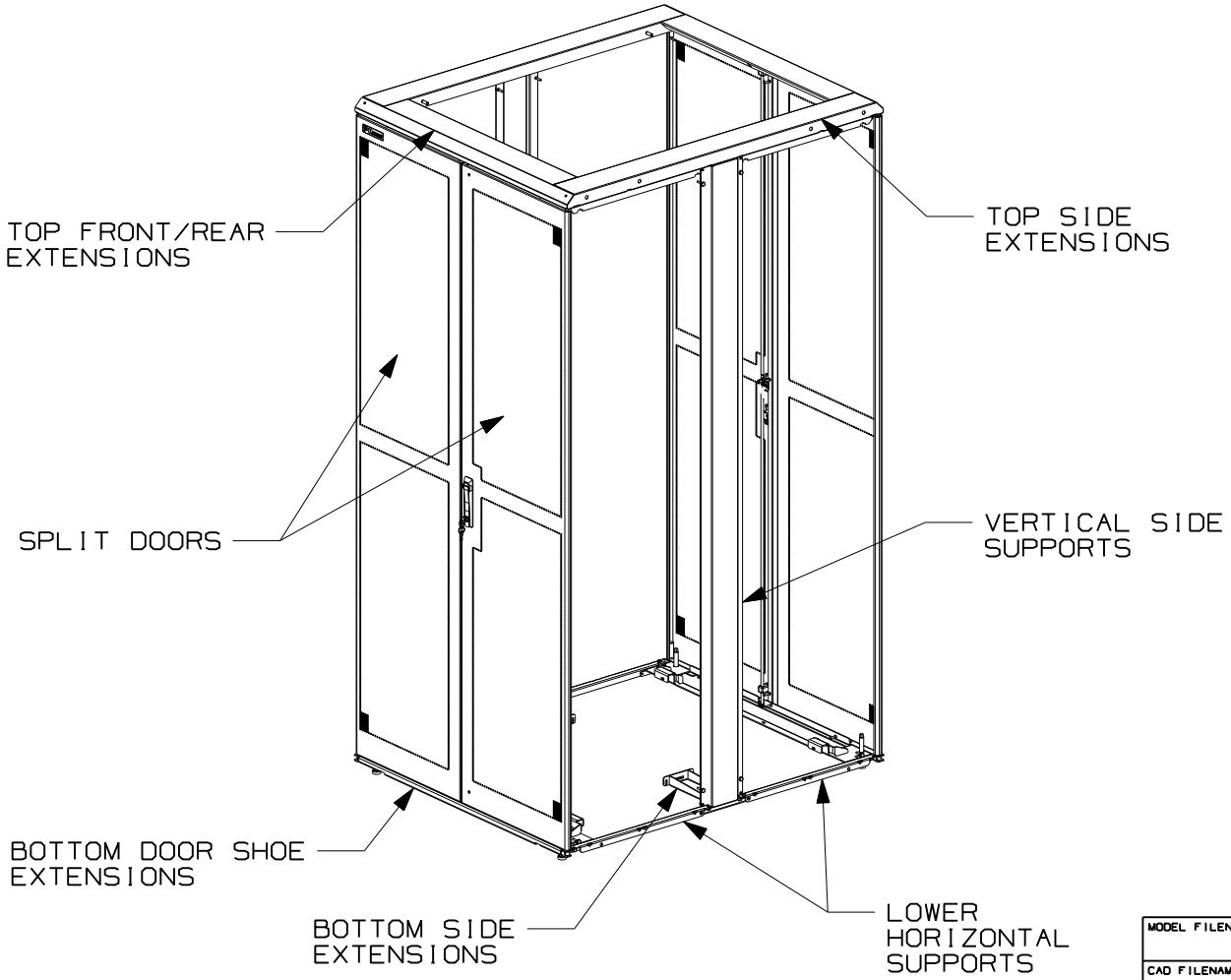

PANDUIT P/N	WEIGHT
CN7018-EXT	244 LBS/EACH 110 Kg/EACH

NOTES:
1. VISIT OUR ON-LINE CATALOG AT WWW.PANDUIT.COM FOR A LIST OF CURRENT PARTS APPLICABLE FOR USE WITH THIS PRODUCT.
2. DIMENSIONS IN PARENTHESES ARE METRIC [mm].
3. PARTS SUPPLIED:
   - 2- TOP SIDE EXTENSIONS
   - 2- TOP FRONT/REAR EXTENSIONS
   - 2- BOTTOM DOOR SHOE EXTENSIONS
   - 2- BOTTOM SIDE EXTENSIONS
   - 2- SPLIT DOOR SETS (4 DOORS TOTAL)
   - 2- VERTICAL SIDE SUPPORTS
   - 4- LOWER HORIZONTAL SUPPORTS
   - 1- HARDWARE KIT
   - 1- INSTRUCTION SHEET
4. NET ACCESS CABINET IS REQUIRED FOR USE WITH CN7018-EXT (CN3)

REV	DATE	BY	CHK	DESCRIPTION	ECN - R	CUST	SUP	OTH
02B	8-17-09	LEE	JDWE	A. UPDATED VIEWS	V10564YE-DC	PMH		
02A	5-13-09	MRWA	JDWE	RELEASED TO PRODUCTION	V10564YE	PMH		

MODEL FILENAME: V10564YE/02.PRT

CAD FILENAME/LAYERS: V10564YE_DC/02B.PRT

PANDUIT CORP. TINLEY PARK, ILLINOIS

CN7018-EXT CABINET EXTENSION CUSTOMER DRAWING

UNLESS OTHERWISE SPECIFIED, DIMENSIONAL TOLERANCES ARE:

INCHES		[METRIC - MILLIMETER]		ANGLE
X.X	+/- 0.06	X.	+/- 1.5	+/- 1°
X.XX	+/- 0.03	X.X	+/- 0.8	
X.XXX	+/- 0.015	X.XX	+/- 0.4	

UNLESS OTHERWISE SPECIFIED, ALL DIMENSIONS ARE GIVEN IN INCHES, THIRD ANGLE PROJECTION.

DRAWN BY: MRWA/LEE

DATE: 8-17-09

CHK'D: JDWE

MAT'L: SEE NOTES

SCALE: NONE

DRAWING NO.: V10564YE-DC SHT 1 OF 3

DWG SIZE: A

THIS COPY IS PROVIDED ON A RESTRICTED BASIS AND IS NOT TO BE USED IN ANY WAY DETRIMENTAL TO THE INTERESTS OF PANDUIT CORP.

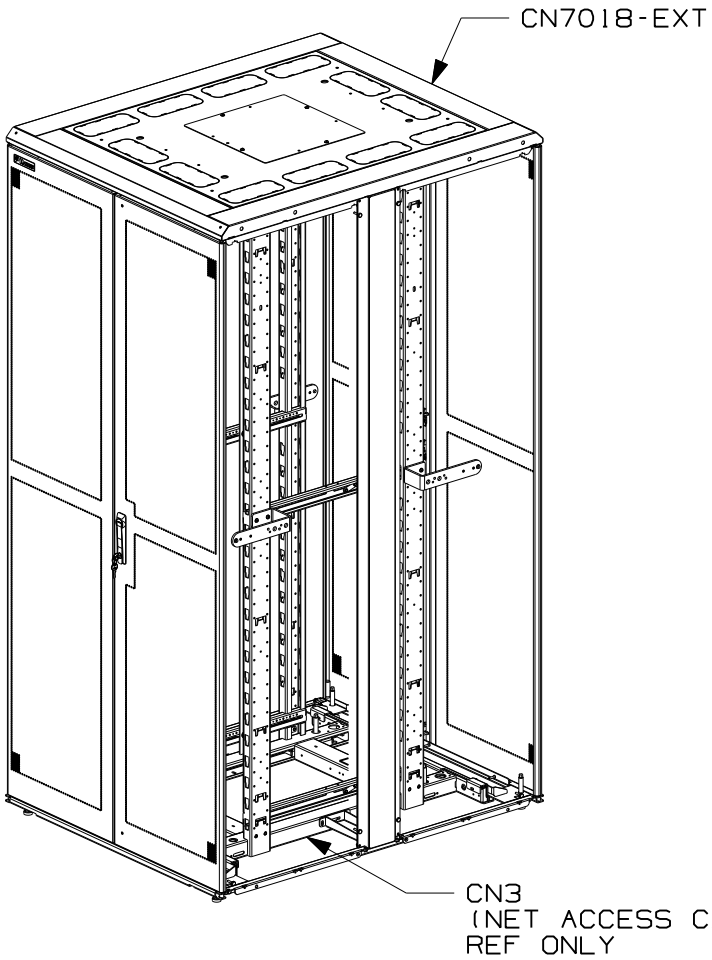

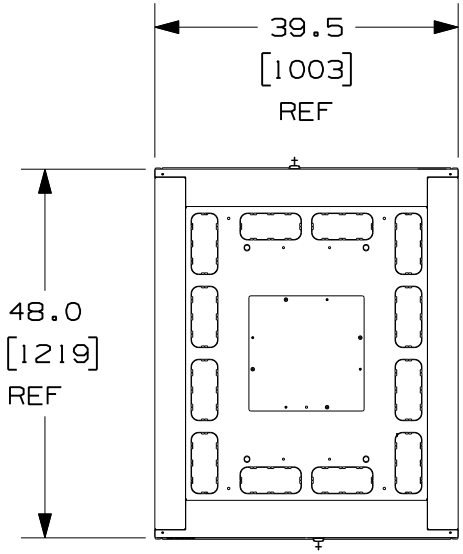

TOP VIEW
CN3 NET ACCESS
CABINET SHOWN (REF)

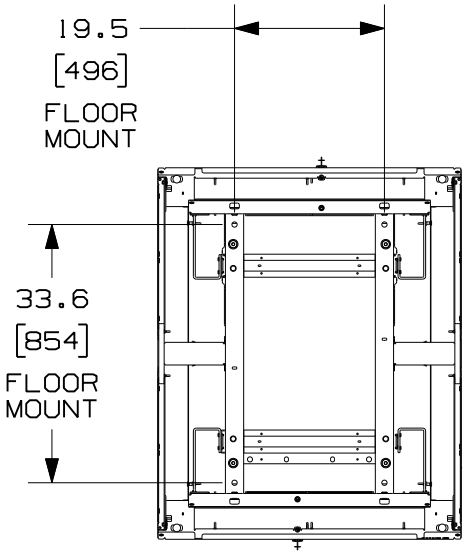

BOTTOM VIEW
CN3 NET ACCESS
CABINET SHOWN (REF)

REV	DATE	BY	CHK	DESCRIPTION	ECN - R	CUST	SUP	OTH
02B	8-17-09	LEE	JDWE	SEE SHEET 1 OF 3 FOR REVISIONS	V10564YE-DC	PMH		
02A	5-13-09	MRWA	JDWE	RELEASED TO PRODUCTION	V10564YE	PMH		

MODEL FILENAME: V10564YE/02.PRT

CAD FILENAME/LAYERS: V10564YE_DC/02B.PRT

PANDUIT CORP. TINLEY PARK, ILLINOIS

CN7018-EXT CABINET EXTENSION CUSTOMER DRAWING

UNLESS OTHERWISE SPECIFIED, DIMENSIONAL TOLERANCES ARE:

INCHES		[METRIC - MILLIMETER]		ANGLE
X.X	+/- 0.06	X.	+/- 1.5	+/- 1°
X.XX	+/- 0.03	X.X	+/- 0.8	
X.XXX	+/- 0.015	X.XX	+/- 0.4	

UNLESS OTHERWISE SPECIFIED, ALL DIMENSIONS ARE GIVEN IN INCHES, THIRD ANGLE PROJECTION.

DRAWN BY: MRWA/LEE

DATE: 8-17-09

CHK'D: JDWE

MAT'L: SEE NOTES

SCALE: NONE

DRAWING NO.: V10564YE-DC SHT 3 OF 3

DWG SIZE: A

THIS COPY IS PROVIDED ON A RESTRICTED BASIS AND IS NOT TO BE USED IN ANY WAY DETRIMENTAL TO THE INTERESTS OF PANDUIT CORP.

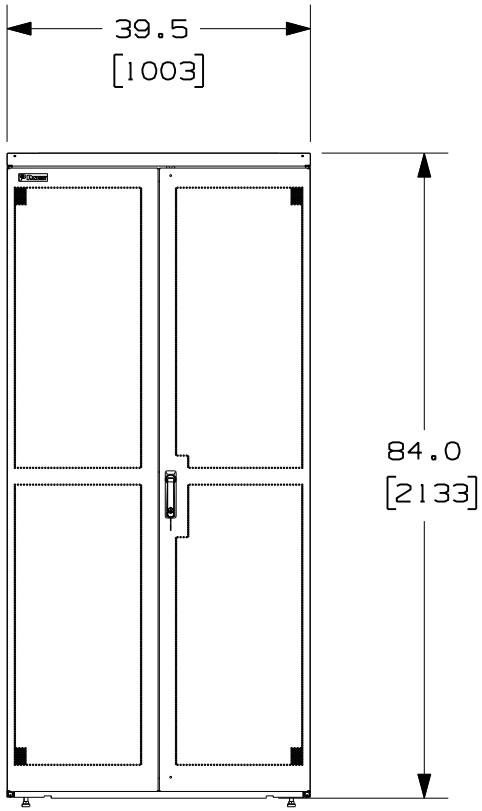

FRONT VIEW

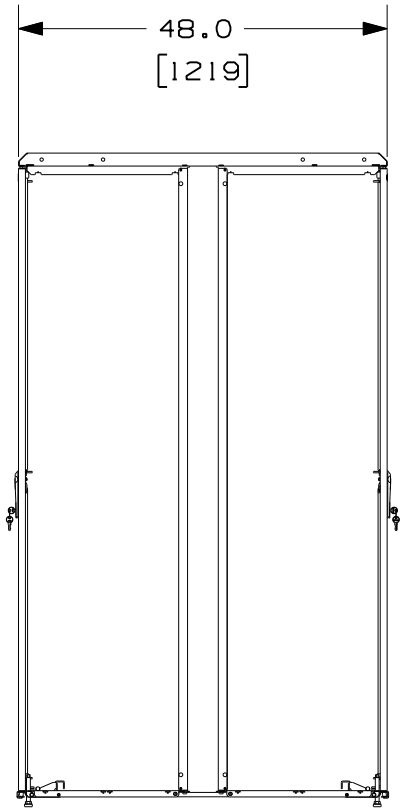

RIGHT SIDE VIEW

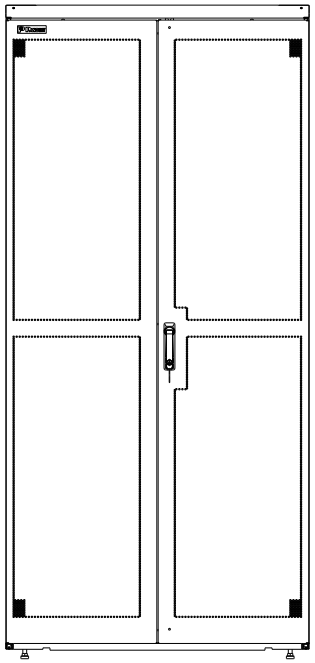

BACK VIEW

REV	DATE	BY	CHK	DESCRIPTION	ECN - R	CUST	SUP	OTH
02B	8-17-09	LEE	JDWE	SEE SHEET 1 OF 3 FOR REVISIONS	V10564YE-DC	PMH		
02A	5-13-09	MRWA	JDWE	RELEASED TO PRODUCTION	V10564YE	PMH		

MODEL FILENAME: V10564YE/02.PRT

CAD FILENAME/LAYERS: V10564YE_DC/02B.PRT

PANDUIT CORP. TINLEY PARK, ILLINOIS

CN7018-EXT CABINET EXTENSION CUSTOMER DRAWING

UNLESS OTHERWISE SPECIFIED, DIMENSIONAL TOLERANCES ARE:

INCHES		[METRIC - MILLIMETER]		ANGLE
X.X	+/- 0.06	X.	+/- 1.5	+/- 1°
X.XX	+/- 0.03	X.X	+/- 0.8	
X.XXX	+/- 0.015	X.XX	+/- 0.4	

UNLESS OTHERWISE SPECIFIED, ALL DIMENSIONS ARE GIVEN IN INCHES, THIRD ANGLE PROJECTION.

DRAWN BY: MRWA/LEE

DATE: 8-17-09

CHK'D: JDWE

MAT'L: SEE NOTES

SCALE: NONE

DRAWING NO.: V10564YE-DC SHT 2 OF 3

DWG SIZE: A