THIS COPY IS PROVIDED ON A RESTRICTED BASIS AND IS NOT TO BE USED IN ANY WAY DETRIMENTAL TO THE INTERESTS OF PANDUIT CORP.

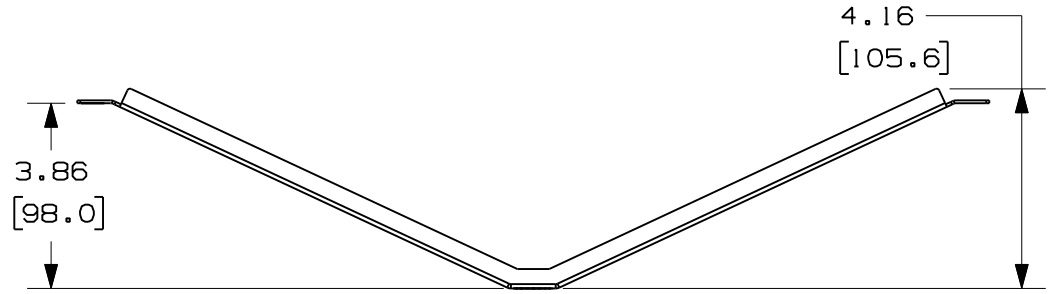

PANDUIT PART NO.	WEIGHT
CFAPPBL2A	7.3 LB/10 PCS (3311.2 g/10 PCS)

NOTES:
1. SEE CURRENT CATALOG FOR COMPLETE LIST OF PARTS APPLICABLE FOR USE WITH THIS PART.
2. THE PATCH PANEL IS DESIGNED FOR MOUNTING TO FMT2A TRAY OR 19" UNIVERSAL RACKS.
3. PACKAGE CONTENTS:
   (1) 2RU PATCH PANEL.
   (1) SCREW KIT (FOUR #12-24 SCREWS).
   (1) SCREW KIT (FOUR M6 SCREWS).
4. DIMENSIONS IN PARENTHESES ARE METRIC.

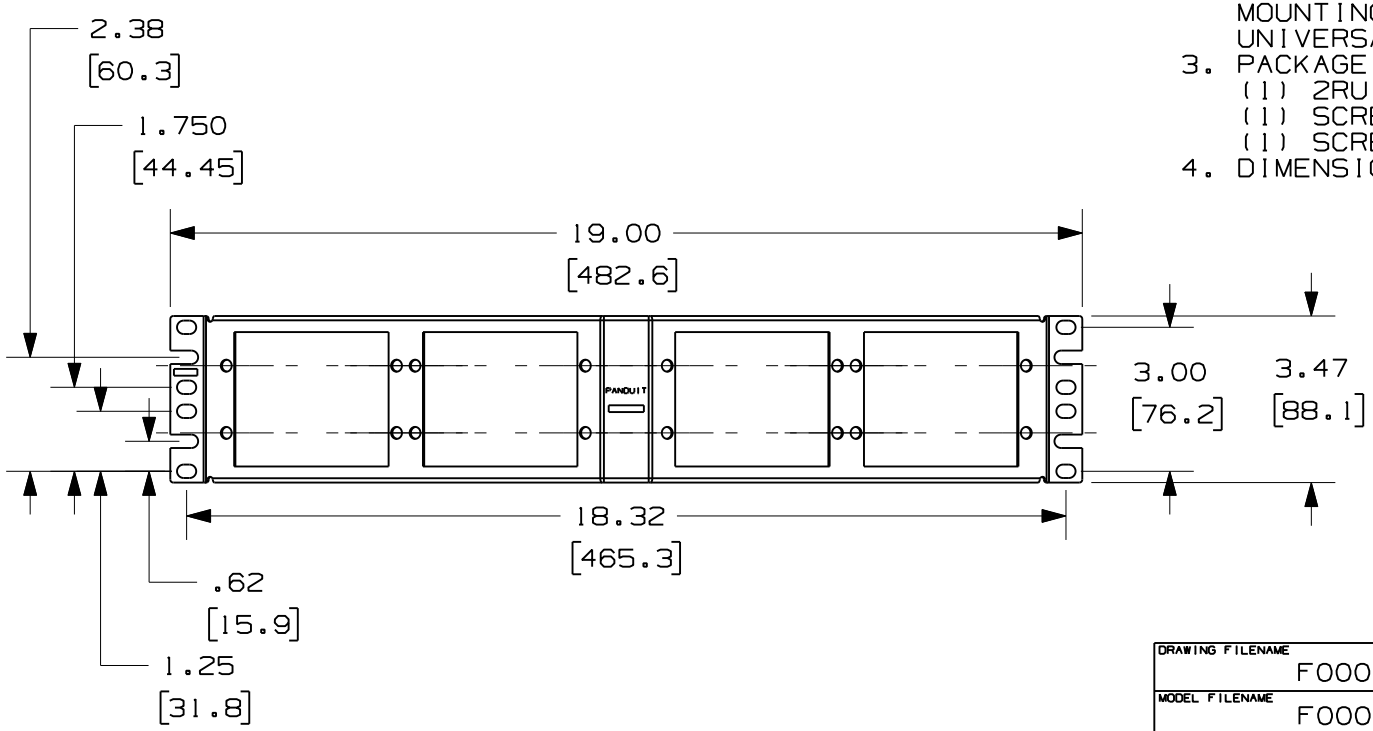

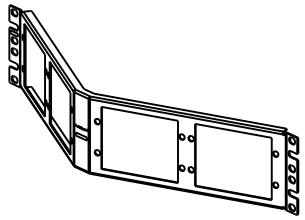

DRAWING FILENAME	SIZE
F00041BB_DC/00A.PRT	A
MODEL FILENAME: F00041BB/00A	

REV	DATE	BY	CHK	DESCRIPTION	ECN - R	CUST	SUP	OTH
R	8/19/08	LEHO		RELEASE FOR PRODUCTION	F00041BB			

2RU ANGLED PATCH PANEL FRAME
CUSTOMER DRAWING

PANDUIT™ CORP.
TINLEY PARK, ILL 60477

THIRD ANGLE PROJECTION

ALL DIMENSIONS ARE GIVEN IN INCHES, UNLESS OTHERWISE SPECIFIED.
DIMENSIONAL TOLERANCES ARE:
(.X) ±.03 (.XXX) ±.005
(.XX) ±.01 ANGLES ± 1°

I.I. NUMBER	
PROD SPEC/PKG SPEC	
ASSY METHOD/TEST METHOD	
SCALE	1:4
DRAWN BY	LEHO
DATE	8/19/08
CHK'D	
REVIEW DRAWING NUMBERS	
MAT'L	SEE NOTES
PART NO.	CFAPPBL2A
DRAWING NO.	F00041BB_DC