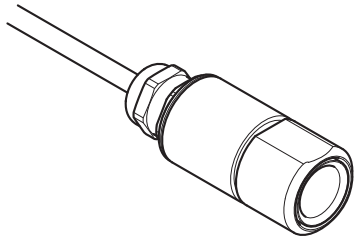

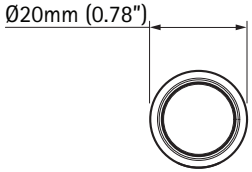

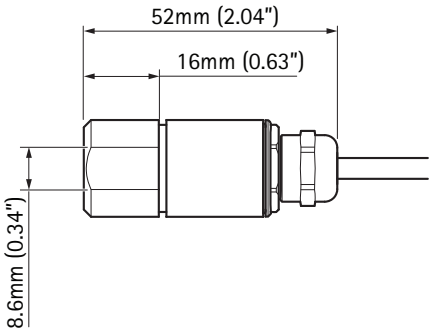

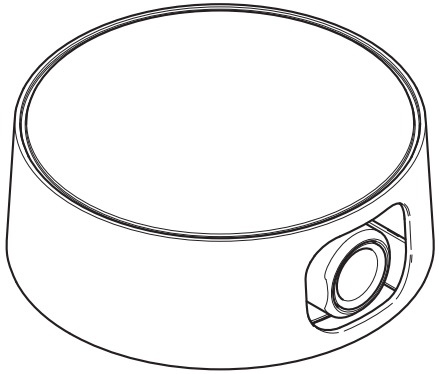

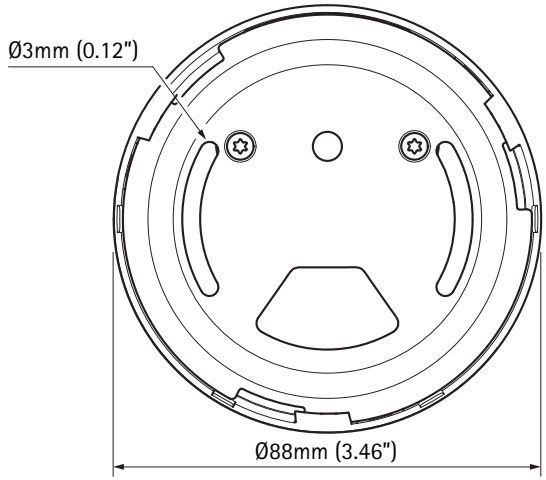

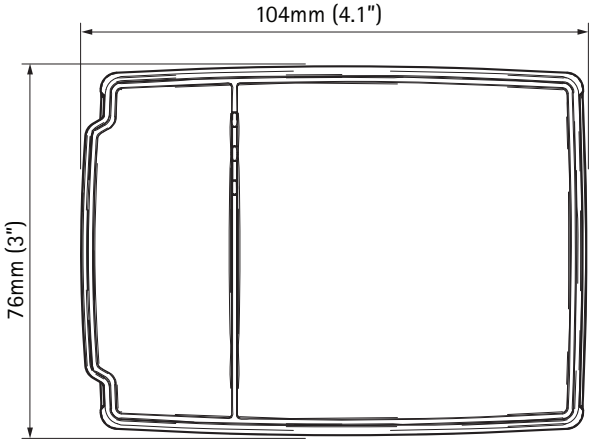

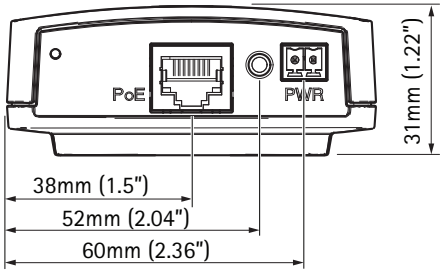

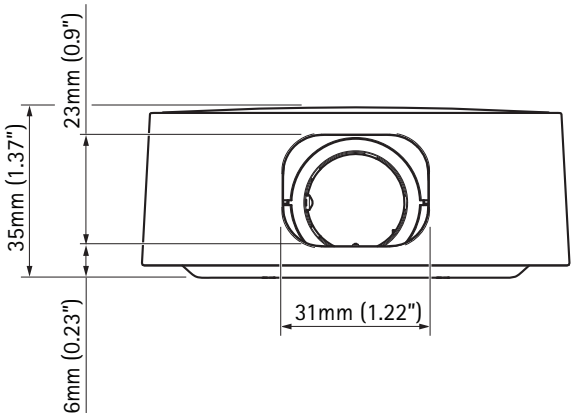

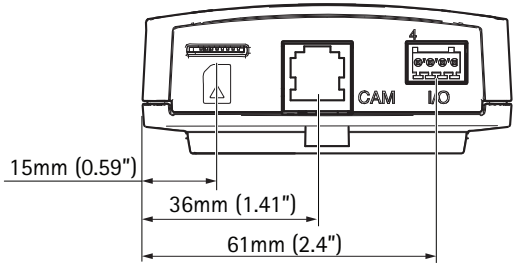

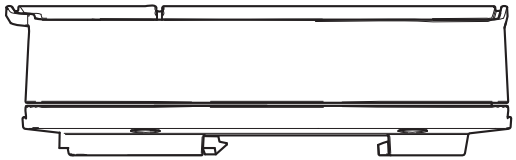

AXIS P1214-E Network Camera

13 JULY, 2012

AXIS COMMUNICATIONS