NO.	Part Name	Material	Process･Remark
1	Clear Dome Cover	PC	With a Protection Film
2	Top Cover	Aluminium Aloy Diecasting	
3	Top Cover Lock Screw	Stainless steel	
4	Mounting Base Cover	Aluminium Aloy Diecasting	
5	Pipe Hole Cap	PA	
6	Network Cable		
7	Power Cable		
8	Alarm I/O Cable		
9	Audio Out Cable		Black
10	Mic./Line In Cable		White
11	Name Plate Label	Polyester Film	
12	Serial Number Label	Polyester Film	
13	Code Label		
14	CE-PTC Label		
15	Production Year Label		
16	MONITOR OUTPUT Jack		
17	Link LED (LINK)		
18	ACCESS LED (ACT)		
19	SD MOUNT LED		
20	SD ERROR / AF LED		
21	INITIAL SET Switch		
22	AF Switch (AF)		
23	TELE Switch (TELE)		
24	WIDE Switch (WIDE)		
25	NTSC/PAL Switch		
26	SD CARD Slot 1		
27	SD CARD Slot 2		
28	SD ON/OFF Switch		
29	Wiring Attention Label	Polyester Film	
30	Attachment Assy		
31	Support wire for installation	SUS304	
32	Data Matrix Label	Polyester Film	
33	Positioning Label	Polyester Film	

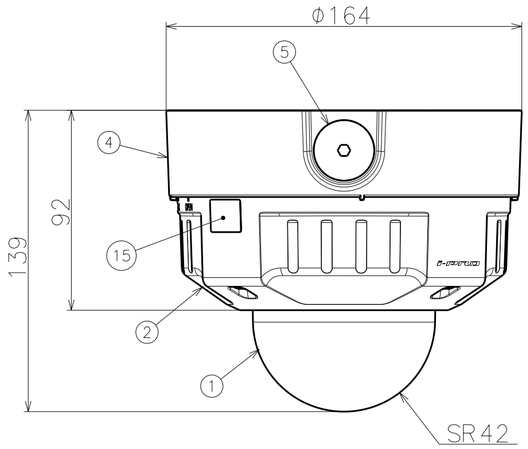

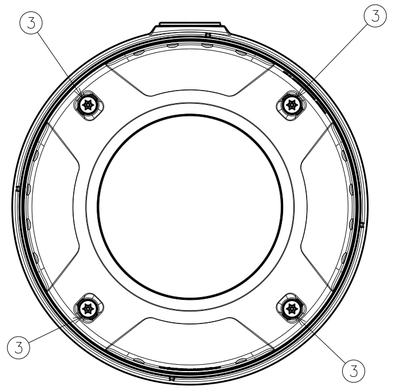

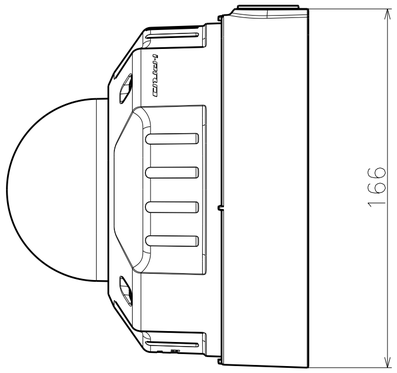

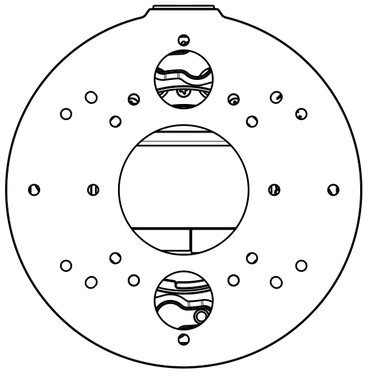

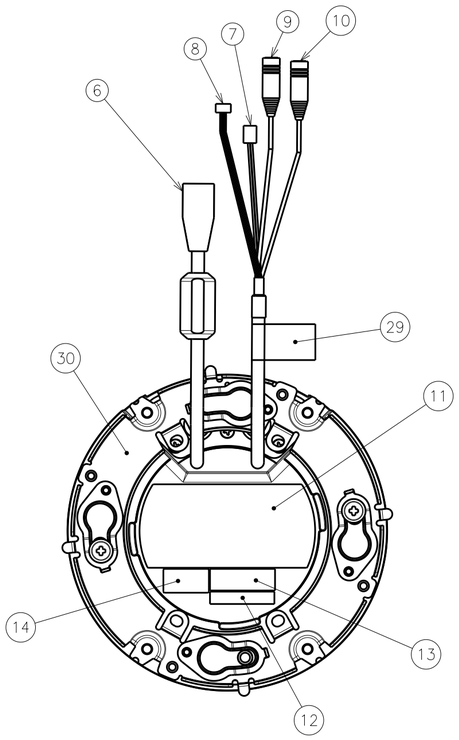

With Attachment Plate

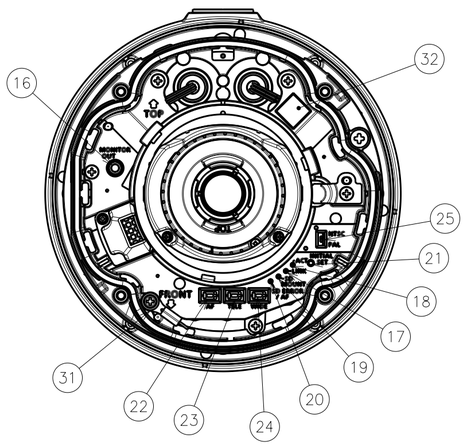

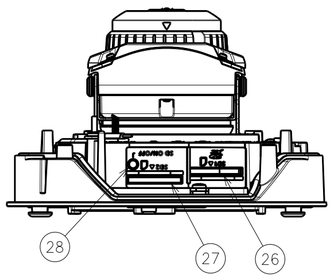

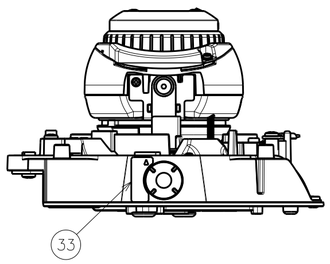

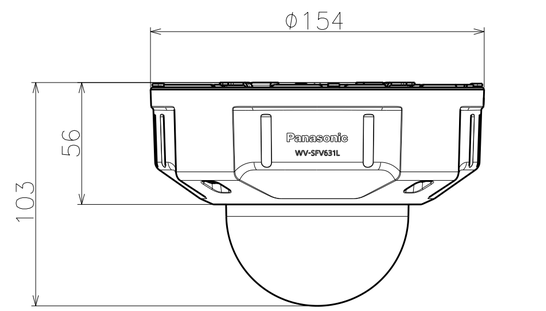

Model WV-SFV631L