SYM.	DATE	REVISION	SIGNED	CHECKED
1				
2				
3				

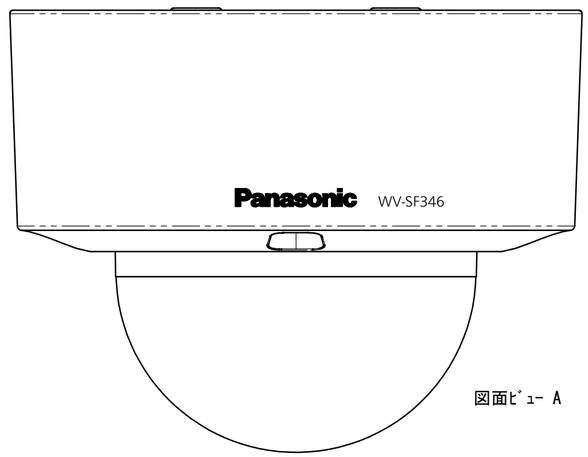

図面ﾋﾞｭｰ A

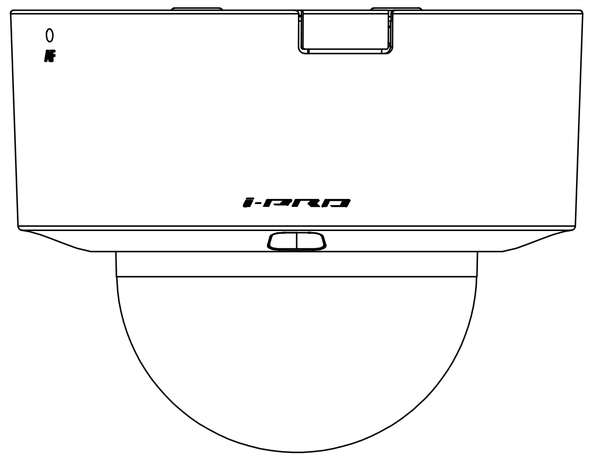

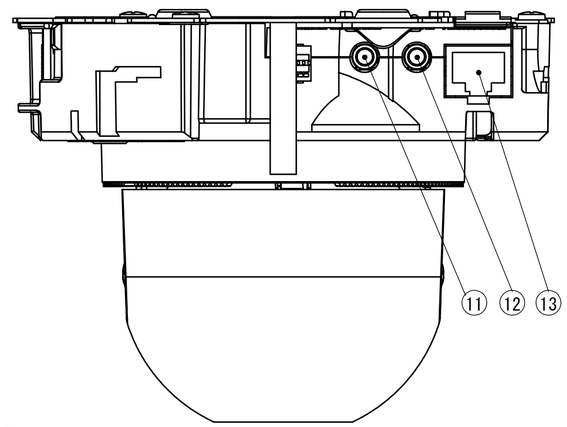

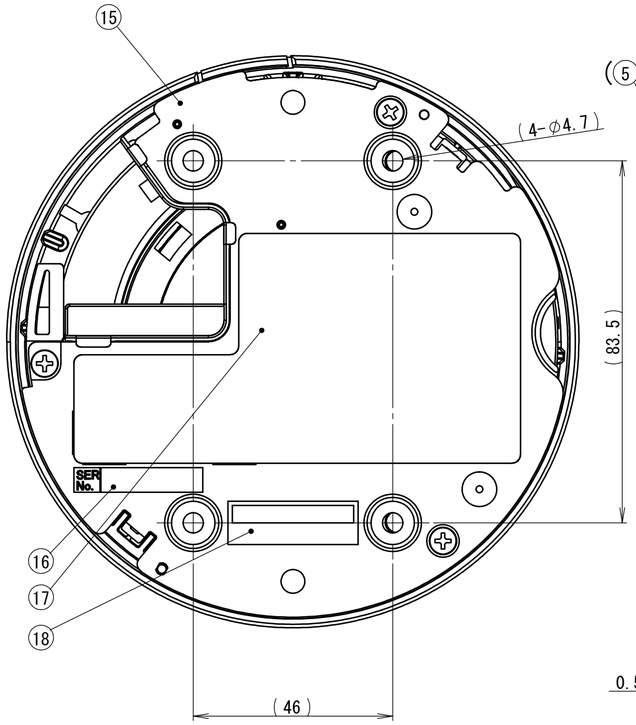

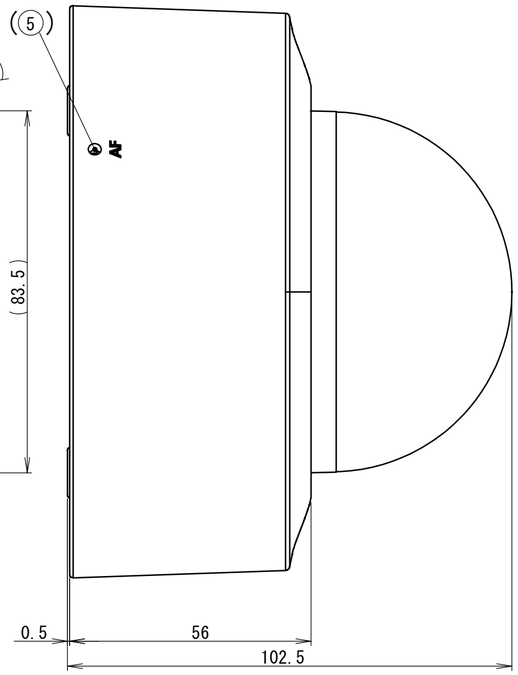

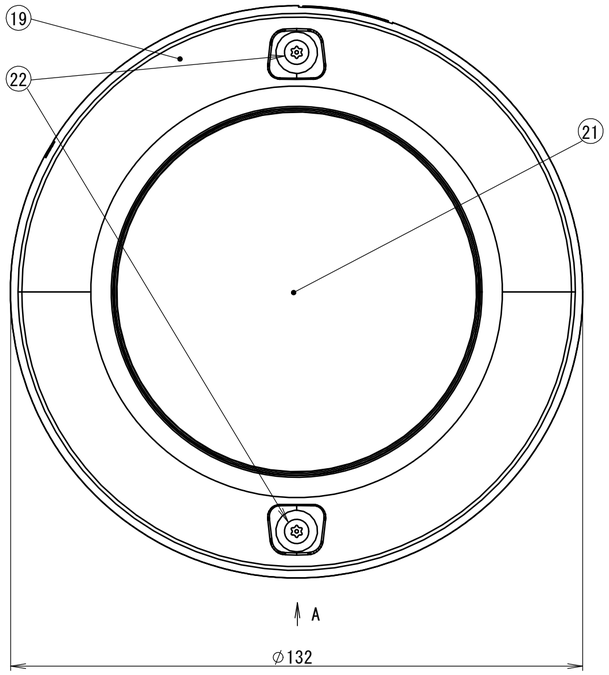

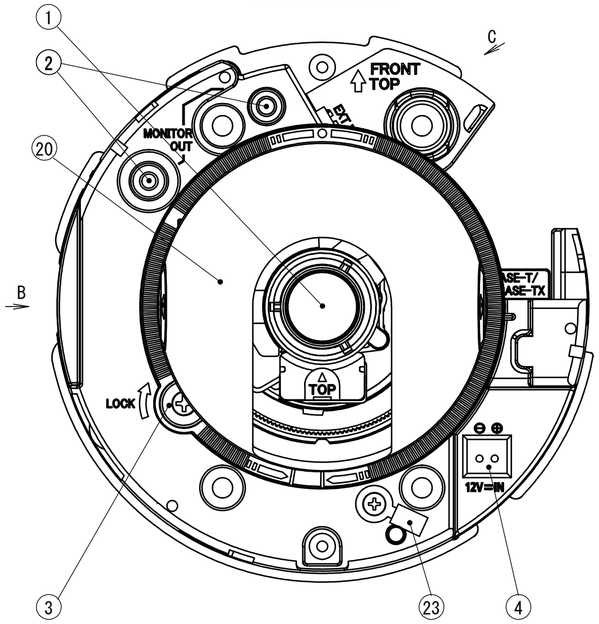

SYM.	ITEM OR PARTS NO.	NAME	QTY	MATERIAL & SIZE	TREATMENT	REMARK
23		Support wire for installation	1	SUS304		
22		Dome Cover fixation Screw	2			
21		Clear Dome	1	PC	Clear	
20		Inner Dome	1	ABS	Black	
19		Dome Cover	1	ADC12		
18		Code Label	1			
17		Name Plate	1	Polyester Film		
16		SERIAL NUMBER Label	1	Polyester Film		
15		Main Chassis	1	EGC20/20QF1 t=1.0		
14		EXT I/O Connector	1			
13		RJ-45 Connector	1			
12		MIC/LINE INPUT Jack	1			
11		AUDIO OUTPUT Jack	1			
10		INITIAL SET Switch	1			
9		SD CARD Socket	1			
8		ACT LED	1			
7		LINK LED	1			
6		SD CARD/AF LED	1			
5		AF Switch	1			
4		DC 12V INPUT Terminal	1			
3		Panning Table Lock Screw	1			
2		MONITOR OUTPUT	2			
1		3.6x AF variable focal Lens	1			

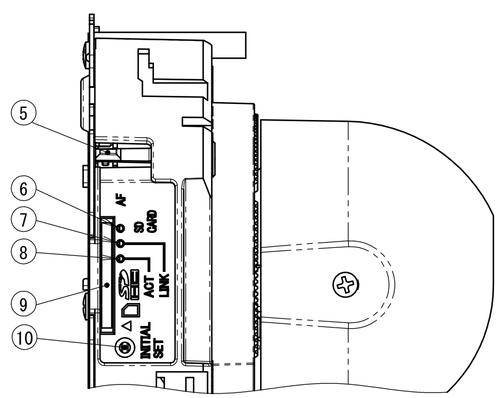

図面ﾋﾞｭｰ B

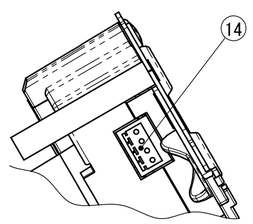

図面ﾋﾞｭｰ C

重要図面配布
CONTROLLED COPY
年 月 日
技術部門

Unit:mm

REMARK				MODEL	WV-SF346P
Weight:Approx.650g	MATERIAL & SIZE		PROCESS	NAME	APPEARANCE
SCALE	DESIGNED	DRAWN	CHECKED / APPROVED	DRAWING/ Part NO.	110A2640AA
1:1	S.Ohya 6.SEP.2010	A.Nakamura 6.SEP.2010		REF.NO.	

A2

Panasonic System Networks Co.,Ltd.

Model File Name/wv-sf335_m2_assy
DWG File Name/110a2640aa_appearance_wv-sf346p

A4