41106-RR6

Connectors

Item Description

Voice Grade QuickPort Connector, 6P6C, red

UPC Code: 07847783427

Country of Origin: Please Contact Customer Service

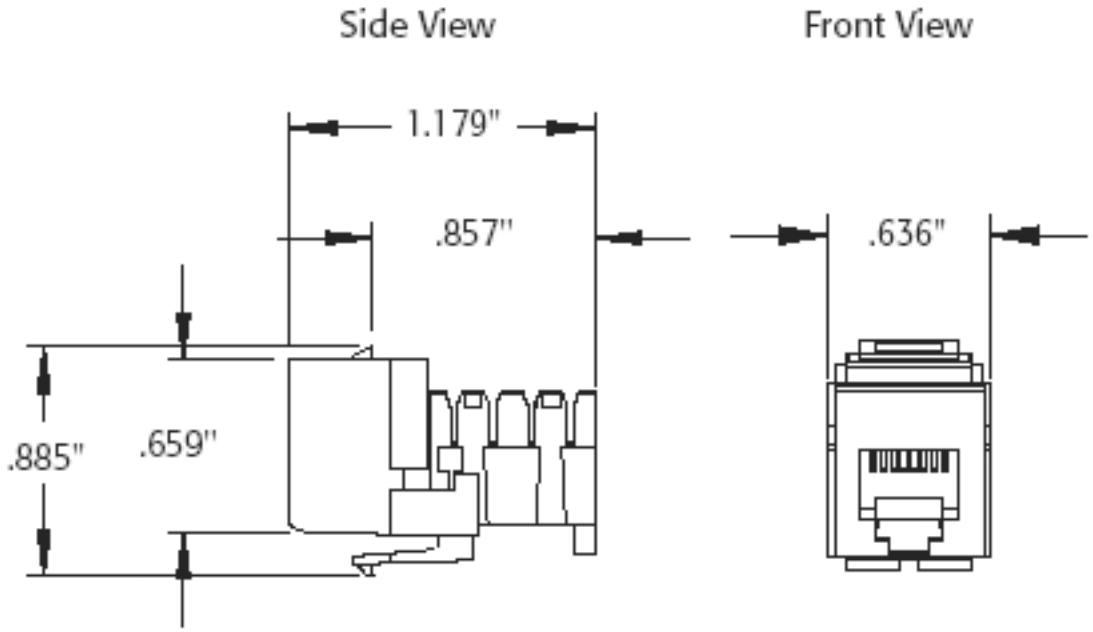

SPECIFICATION SUBMITTAL

JOB NAME:	CATALOG NUMBERS:	
JOB NUMBER:		

Leviton Manufacturing Co., Inc.
201 North Service Road, Melville, NY 11747
Telephone: 1-800-323-8920 · FAX: 1-800-832-9538 · Tech Line (8:30AM-7:30PM E.S.T. Monday-Friday): 1-800-824-3005

Leviton Manufacturing of Canada, Ltd.
165 Hymus Boulevard, Pointe Claire, Quebec H9R 1E9 · Telephone: 1-800-469-7890 ·
FAX: 1-800-824-3005 · www.leviton.com/canada

Leviton S. de R.L. de C.V.
Lago Tana 43, Mexico DF, Mexico CP 11290 · Tel.: (+52)55-5082-1040 · FAX: (+52)5386-1797 · www.leviton.com.mx

Visit our Website at: www.leviton.com
© 2012-2015 Leviton Manufacturing Co., Inc. All rights reserved. Subject to change without notice.

Leviton has a global presence.
If you would like to know where your local Leviton office is located please go to: www.leviton.com/international/contacts/