VARIO w2-2

Adaptive Illumination™

MULTI-ANGLE WHITE-LIGHT

The VARIO w2-2 Adaptive Illumination™ Series represents class leading White-Light illumination designed for all CCTV installations. VARIO illuminators combine the latest advances in optics, remote control, electronic feedback and green technology into an outstanding all-round package.

The unique VARIO beam pattern system is the latest development in interchangeable holographic optics and allows users to precisely match the angle of illumination to the required field of view. VARIO lenses use hot-spot reduction technology (HRT) to produce images far better than those possible with normal LED illuminators. The HRT system delivers a highly diffused elliptical beam shape to deliver light directly to where it is most needed, allowing greater illumination distances, reducing light and energy wastage and preventing the overexposure of foreground objects.

An optional VARIO remote control provides the ability to set-up the illuminator quickly, safely and from ground level. Active LED life control ensures high reliability and consistent optical output and all VARIO illuminators are part of the Raytec Green Touch programme, delivering outstanding performance with minimal environmental impact. The VARIO LED status indicator provides instant operational feedback on status and performance of the illuminator.

A standard VARIO kit includes interchangeable lenses to deliver angles of 10, 35 and 60 degrees out of the box; enough flexibility to cover most applications. Other angles are available on request. VARIO illuminators are supplied complete with bracket and operate directly from a 12-24V input.

INTERCHANGEABLE LENS SYSTEMS

At the heart of VARIO is a holographic lens system that allows the user to change the angle of light by changing the VARIO lens. A wide range of lenses are available to ensure that VARIO illuminators meet the demands of any installation. A standard VARIO illuminator delivers 10° circular, 35x10° and 60x25° elliptical angles out of the box. Other VARIO lenses are available on request.

POWERFUL
- Distances up to 70m
- PLATINUM SMT LED technology
- **HRT** Hot-spot Reduction Technology

FLEXIBLE
- VARIO holographic lens system
- Angles from 10-120 degrees - interchangeable
- Optional VARIO remote control interface
- Adaptive Illumination™

RELIABLE
- LED status indicator
- Active LED Life Control
- Vandal Resistant

CONTROLLED
- Command and Control Technology™
- Elliptical beams angles for optimal light distribution
- Semi-Covert (850nm) or Covert (940nm) Options

Version 5

APPLICATIONS

MILITARY BASE

AIRPORT

INDUSTRIAL PARK

DOME SYSTEM

POWER PLANTS

raytec

MULTI-ANGLE WHITE-LIGHT

VARIO INTERCHANGEABLE LENSING

Angle of illumination can be easily, quickly and precisely adjusted by changing the Vario holographic lens insert. Never again be caught with the wrong angle illuminator. Elliptical and Circular beam patterns available.

LED STATUS INDICATOR

Quick operational feedback on status and performance of the illuminator. Allows simple and quick commissioning of the installation and easy maintenance reviews

HRT - HOT-SPOT REDUCTION TECHNOLOGY

HRT - hot-spot reduction technology delivers a highly diffused, elliptical beam shape to deliver more light where it is needed, generating both longer distances and minimizing light wastage. The HRT system also prevents overexposure of foreground objects.

VARIO REMOTE CONTROL

1 man installation, reduces both cost and time of installation. Allows set up quickly and safely from ground level and provides access to advanced set up features.

GREEN TOUCH TECHNOLOGY

In-built green features such as power adjust, telemetry control and timer function enhance the potential for energy savings. Fully recyclable packaging minimises physical waste and less light is wasted with the use of elliptical beam patterns. All VARIO units deliver high performance with low running costs.

PLATINUM ADVANCED LED TECHNOLOGY

PLATINUM illuminators use cutting edge SMT LED technology together with Light Intensification Miniature Optics (LIMO™) and an enhanced Cool Running™ thermal management system into a single high performance LED. The result is World leading power, reliability and flexibility.

5 YEAR WARRANTY

All Raytec CCTV illuminators are provided with a 5 year warranty, unmatched anywhere in the CCTV lighting industry. Raytec illuminators provide guaranteed long life!

5 YEAR WARRANTY

TECHNICAL SPECIFICATIONS

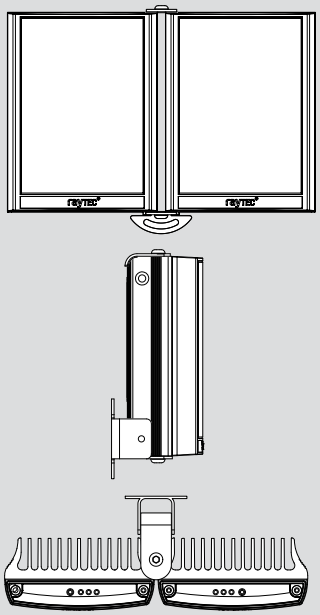

ILLUMINATOR

Total Lumens:	1466lm
Max Distance:	70m (230ft)
Angle:	Each single unit standard pack includes 10 circular + 35 x 10 (fitted as standard) and 60 x 25 elliptical lenses Additional optional lenses: 80 x 30 120 x 50
Optics:	SMT LED's
Consumption:	24W max
Input:	12/24V AC/DC
Voltage:	13.5V current controlled
Weight:	1.5kg (3.3lbs)
Environmental:	IP66
Temp Range:	-50 to +50˚C (-58 to 122°F)
Cable Length:	2.5m
Colour:	Black
Wavelength:	850 or 940nm
Dimensions:	159 x 144 x 63mm 6" x 5" x 2.5" approx

BRACKETRY

U Bracket and Adaptive Illumination bracket included.

INTEGRATED COMMAND AND CONTROL TECHNOLOGY

Integrated Standard Features

- In-built photocell for automatic on/off operation
- LED status indicator provides status on performance of the unit
- Photocell following output

Integrated Advanced Features
(accessed via VARIO remote control)

- Power adjust from 20-100%
- Photocell sensitivity adjust
- Timer function (up to 30 mins)
- Telemetry control
- Remote Dimming
- LED status indicator on/off
- Restore factory default settings

PART CODES & DISTANCES

			NARROW ANGLE	WIDE ANGLE
VAR-w2-2	VARIO w2-2 with 3 angle options included 12-24V, 850nm	10x10°	90m (295ft)at 10°	60m (197ft)at 20°
		35x10°(fitted as standard on both units)	55m (180ft)at 35°	38m (125ft)at 70°
		60x25°	30m (98ft)at 60°	20m (66ft)at 120°
		80 x 30°	20m (66ft)at 80°	15m (49ft)at 140°
		120 x 50°	15m (49ft)at 120°	10m (33ft)at 180°

OPTIONAL PARTS

VAR-rc	Remote Control for any VARIO illuminator (only 1 remote needed)
VAR-w2-LENS-8030	Individual w2 VARIO lens – 80H x 30V
VAR-w2-LENS-12050	Individual w2 VARIO lens – 120H x 50V

raytec

Europe / Middle East: Tel: +44 (0) 1670 520055 Email: sales@raytecccctv.com
Americas: Tel: +1 613 270 9990 Email: ussales@raytecccctv.com
Toll Free: +1 888 505 8335 Web: www.raytecccctv.com