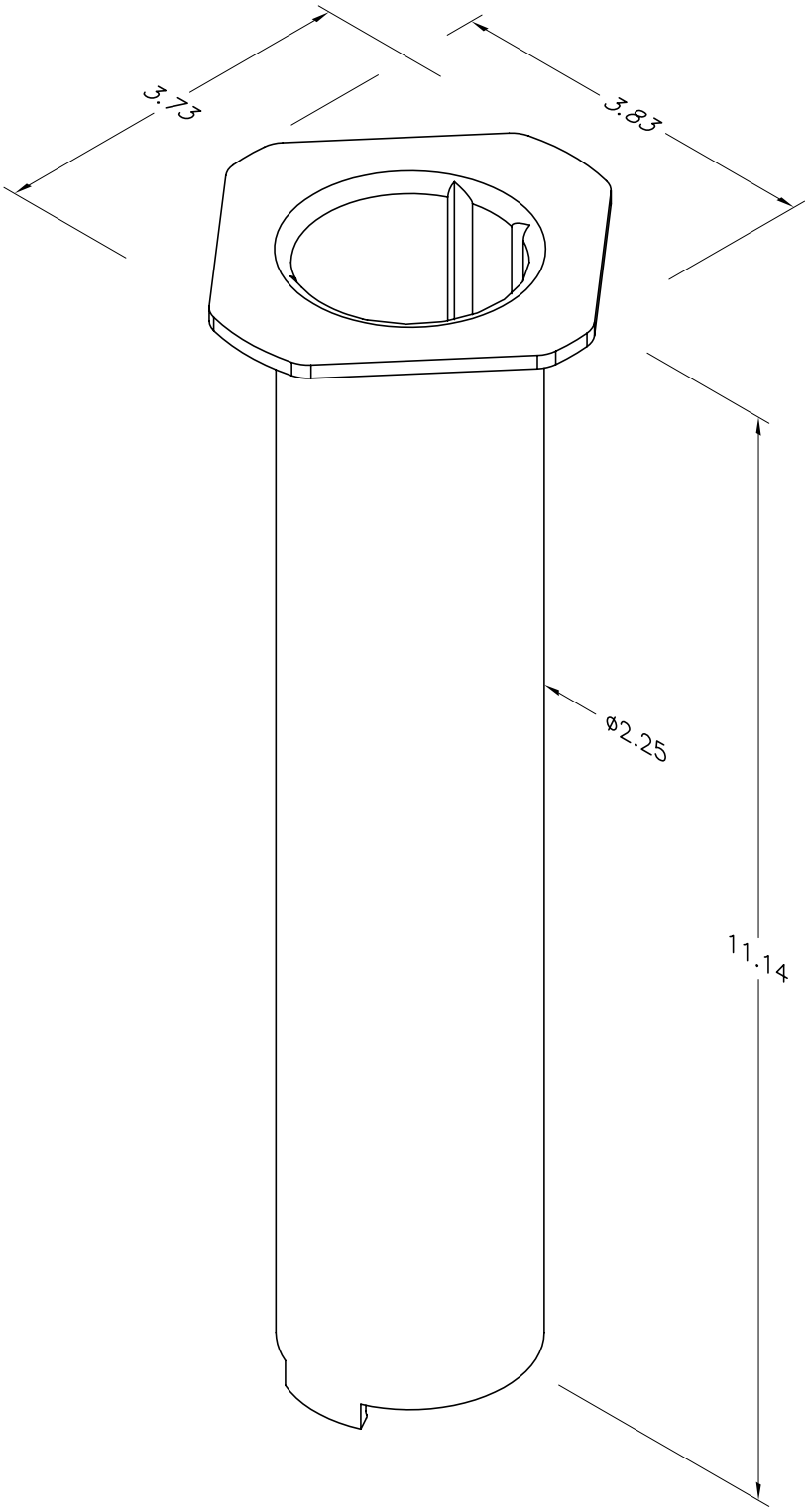

*** NOTICE ***
THIS DOCUMENT CONTAINS CONFIDENTIAL AND/OR PROPRIETARY INFORMATION INTENDED FOR USE ONLY BY THE INDIVIDUAL(S) SPECIFIED HEREIN AND ONLY FOR THE PURPOSE(S) PROVIDED. NEITHER THIS DOCUMENT, NOR ANY INFORMATION CONTAINED HEREIN, MAY BE COPIED, DISTRIBUTED, DISCLOSED TO ANY THIRD PARTY OR USED IN ANY MANNER OTHER THAN FOR WHICH IT HAS BEEN PROVIDED, WITHOUT THE PRIOR WRITTEN CONSENT OF ORTRONICS, INC.

ORTRONICS
NEW LONDON, CT 06320
(860) 445-3800

DWN.BY:	RYNASKI	DATE 5/16/05
CHK.BY:	A.M.	5/17/05
APP.BY:	M.E.M.	5/17/05

TITLE
CABLE MANAGEMENT SPOOL, 11 IN
KIT OF 4

SIZE	CAD FILE	PART NUMBER	REV
A	MM6CMS10C	OR-MM6CMS10	00

SCALE	DATE	SHEET
NONE	5/16/05	1 OF 1