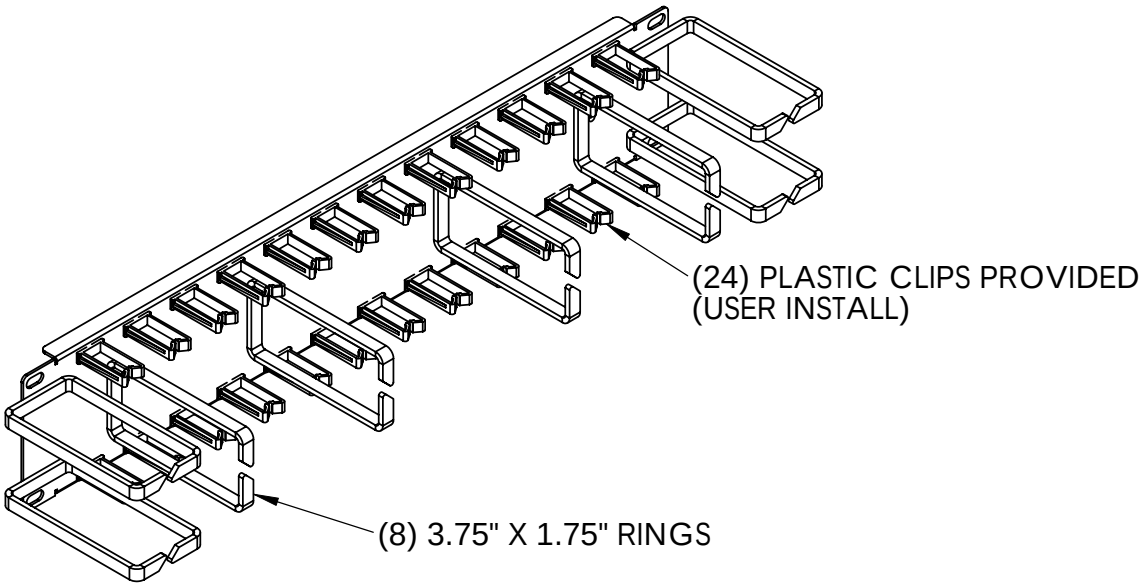

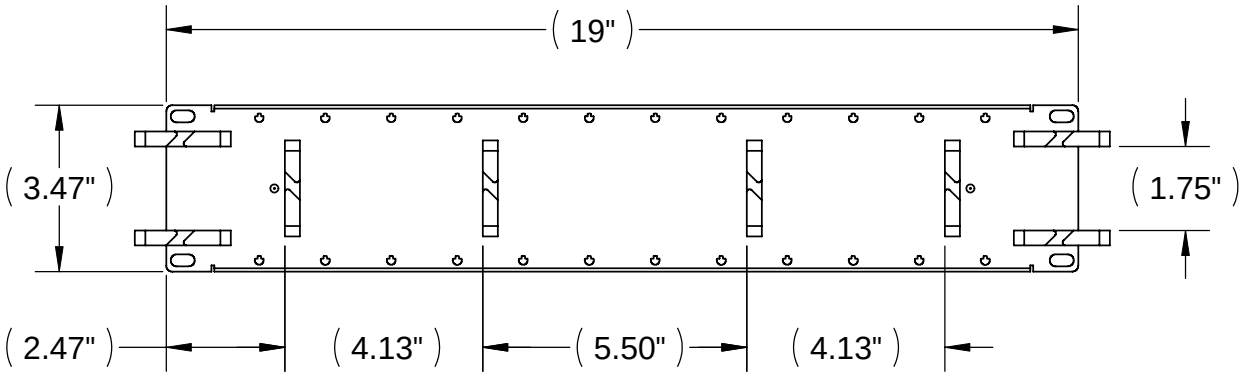

*** NOTICE ***
THIS DOCUMENT CONTAINS CONFIDENTIAL AND/OR PROPRIETARY INFORMATION INTENDED FOR USE ONLY BY THE INDIVIDUAL(S) PROVIDED. NEITHER THIS DOCUMENT, NOR ANY INFORMATION CONTAINED HEREIN, MAY BE COPIED, DISTRIBUTED, DISCLOSED TO ANY THIRD PARTY OR USED IN ANY MANNER OTHER THAN FOR WHICH IT HAS BEEN PROVIDED, WITHOUT THE PRIOR WRITTEN CONSENT OF ORTRONICS, INC. MANUFACTURING RELEASE, PRODUCT SPECIFICATIONS AND STANDARDS ARE SUBJECT TO CHANGE WITHOUT NOTICE.

ORTRONICS®
125 EUGENE O'NEILL DRIVE
NEW LONDON, CT 06320
TEL: 860-445-3800
FAX: 860-405-2990
WWW.ORTRONICS.COM

TITLE

HOMACO PATCH CORD ORG
FRONT MGMT, LG RINGS, 2U

	NAME	DATE
DWN	C.VACCA	05/19/08
CHK	S.A.L.	09/24/08
APPR	A.M.	09/29/08

SIZE	CAD FILE	DWG NO	REV
A	FCM192LC	OR-FCM-19-2L	03
SCALE NONE	WEIGHT	SHEET 1 OF 1	