THIS COPY IS PROVIDED ON A RESTRICTED BASIS AND IS NOT TO BE USED IN ANY WAY DETRIMENTAL TO THE INTERESTS OF PANDUIT CORP.

PANDUIT P/N	WEIGHT
P110LH	.097 LB/6 PCS. (4.1 G/6 PCS.)

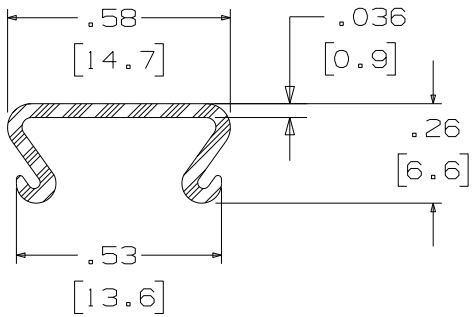

NOTES:

1. SEE CURRENT CATALOG FOR ADDITIONAL PART NUMBER SUFFIXES TO INDICATE PACKAGE QUANTITY.
2. THIS PART USED ON 110 CONNECTOR BASES, P/N'S: P110B100-X, P110BW100-X, P110B300-X, P110BW300-X.
3. DIMENSIONS IN PARENTHESIS ARE IN METRIC.

ACTUAL SIZE

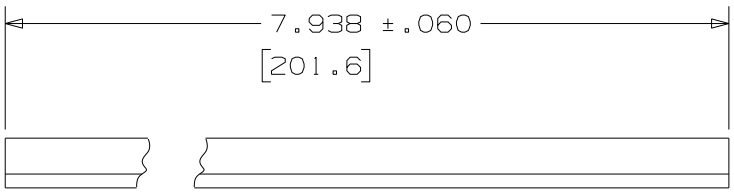

REV	DATE	BY	CHK	DESCRIPTION	ECN	CHK	CUST	SUP
R	4-3-96	JBA		RELEASED TO PRODUCTION.	35536-01			

CAD FILENAME/LAYERS: D35536BB_110WBLLH_00

PANDUIT CORP. TINLEY PARK, ILLINOIS

110 WIRING BLOCK LABEL HOLDER
CUSTOMER DRAWING

UNLESS OTHERWISE SPECIFIED, DIMENSIONAL TOLERANCES ARE:
(.X) ± (.XXX) ±.010(.3)
(.XX) ±.03(.8) ANGLES ±

UNLESS OTHERWISE SPECIFIED, ALL DIMENSIONS ARE GIVEN IN INCHES, THIRD ANGLE PROJECTION.

DRAWN BY: JBA
DATE: 4-3-96
CHECKED BY:

MAT'L: CLEAR PVC

SCALE: NONE

DRAWING NO.: 35536-01

DWG SIZE: A