THIS COPY IS PROVIDED ON A RESTRICTED BASIS AND IS NOT TO BE USED IN ANY WAY DETRIMENTAL TO THE INTERESTS OF PANDUIT CORP.

PANDUIT PART NUMBER	STUD SIZE	DIMENSIONS - in.					TOOL
		A +/- .03	W +/- .01	C +/- .015	M +/- .03	H +/- .01	
P22-4F	#4	.49 (12.45)	.19 (4.83)	.20 (5.08)	.39 (9.91)	.13 (3.30)	CT-100A (POCKET B)
P22-6F	#6	.59 (14.99)	.25 (6.35)	.26 (6.60)	.47 (11.94)	.15 (3.81)	CT-200

NOTES:

1. RECOMMENDED FOR #26-22 SOLID OR STRANDED COPPER WIRE
2. MATERIAL:
   A. STAMPING - .020 (0.51) THK COPPER, TIN PLATED
3. SEE WWW.PANDUIT.COM FOR PACKAGE QUANTITIES
4. DIMENSIONS IN BRACKETS ARE IN MILLIMETERS
5. WIRE STRIP LENGTH: 3/16 + 1/32 (4.8 +.8) - 0 - 0

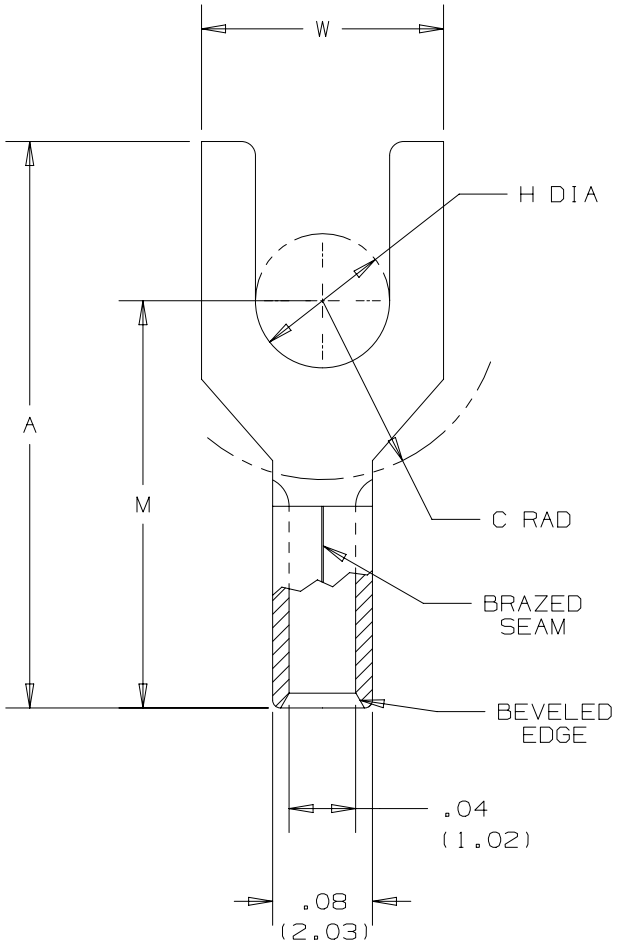

REV	DATE	BY	CHK	APR	DESCRIPTION	ECN
07	4/14	JHNU	JHNU	RGB	REVISED LAYOUT OF TOOL IN TABLE	N41229BA-DC
06	4/14	JHNU	JHNU	RGB	REVISED NOTES, TABLE REVISED TITLE BLOCK	N41229BA-DC

TITLE

#26-22 BARREL NON-INSULATED FORK TONGUE

CUSTOMER DRAWING

ITEM REVISION NAME: N41229BA/07

DATASET FILE NAME: N41229BA/07

UNLESS OTHERWISE SPECIFIED, DIMENSIONAL TOLERANCES ARE: IN [mm]

.X ± .XXX ±

.XX ± ANGLES ±

THIRD ANGLE PROJECTION

MATERIAL: SEE NOTES

DRAWING NUMBER: N41229BA-DC

DRAWN BY	DATE	CHK	SCALE	SIZE
DAW			N/A	A

SHT 1 OF 1

D10100DA/16