THIS COPY IS PROVIDED ON A RESTRICTED BASIS AND IS NOT TO BE USED IN ANY WAY DETRIMENTAL TO THE INTERESTS OF PANDUIT CORP.

PANDUIT P/N	WEIGHT
CFPUKS3**Y	.62 LB/10 PCS (281.2 g/10 PCS)

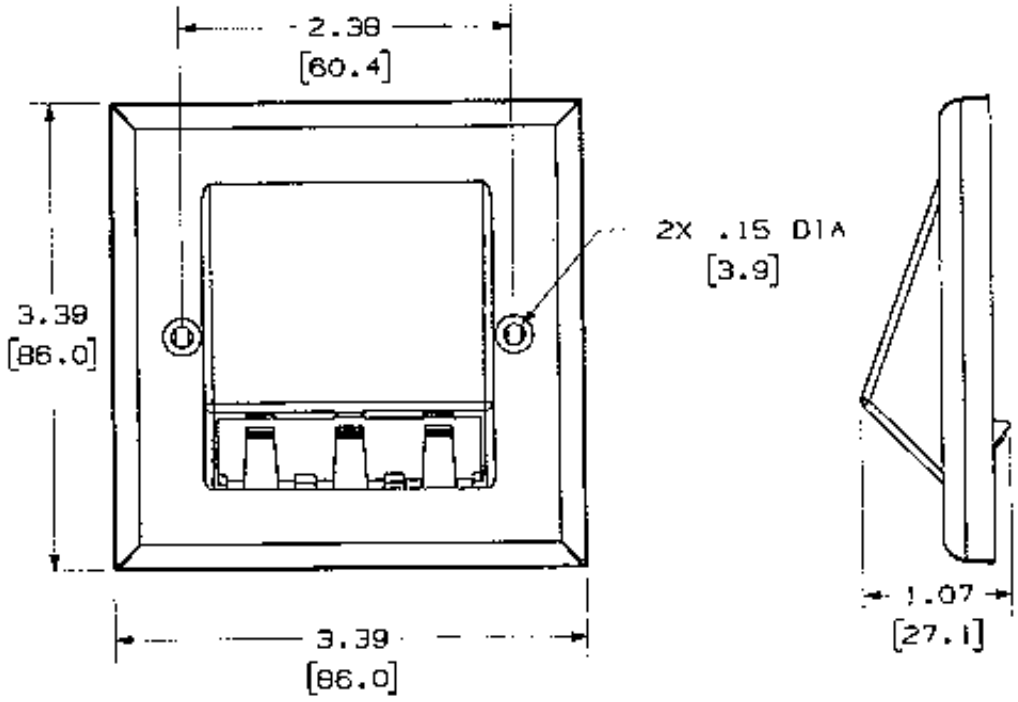

NOTES:
1. SEE CURRENT CATALOG FOR ADDITIONAL PART NUMBER SUFFIXES TO INDICATE COLOR AND OR PACKAGE QUANTITY.
2. SEE CATALOG FOR COMPLETE LIST OF PARTS APPLICABLE FOR USE WITH THIS PART.
3. DIMENSIONS IN PARENTHESES ARE IN METRIC.
4. PART INCLUDES:
   1- FACEPLATE
   2- M3.5mm X 30mm MOUNTING SCREW

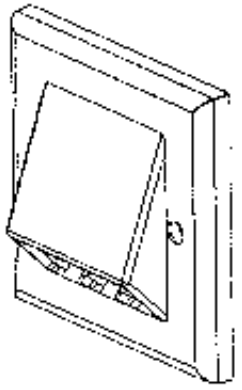

REV	DATE	BY	CHK	DESCRIPTION	ECN - R	CUST	SUP	OTH
R	4-16-08	JsP		RELEASED TO PRODUCTION	02479-150			

SIZE A

DRAWING FILENAME: M02479FZ 02158_00A.PRT

MINI-COM U.K. SINGLE GANG 3 POSITION SLOPED FACEPLATE CUSTOMER DRAWING

PANDUIT™ CORP.
TINLEY PARK, IL 60477

ALL DIMENSIONS ARE GIVEN IN INCHES, UNLESS OTHERWISE SPECIFIED.
DIMENSIONAL TOLERANCES ARE:
[.X] ± [.XXX] ± .010 [.25]
[.XX] ± .030 [.8] ANGLES ±

THIRD ANGLE PROJECTION

E.C. NUMBER	N/A
PRODUCT SPEC	N/A
WORK INSTRUCTION	N/A
SCALE	NONE
DRAWN BY	JsP
DATE	4-16-08
CHK'D	
MATERIAL	ABS
PART NO.	CFPUKS3**Y
DRAWING NO.	02479-158