THIS COPY IS PROVIDED ON A RESTRICTED BASIS AND IS NOT TO BE USED IN ANY WAY DETRIMENTAL TO THE INTERESTS OF PANDUIT CORP.

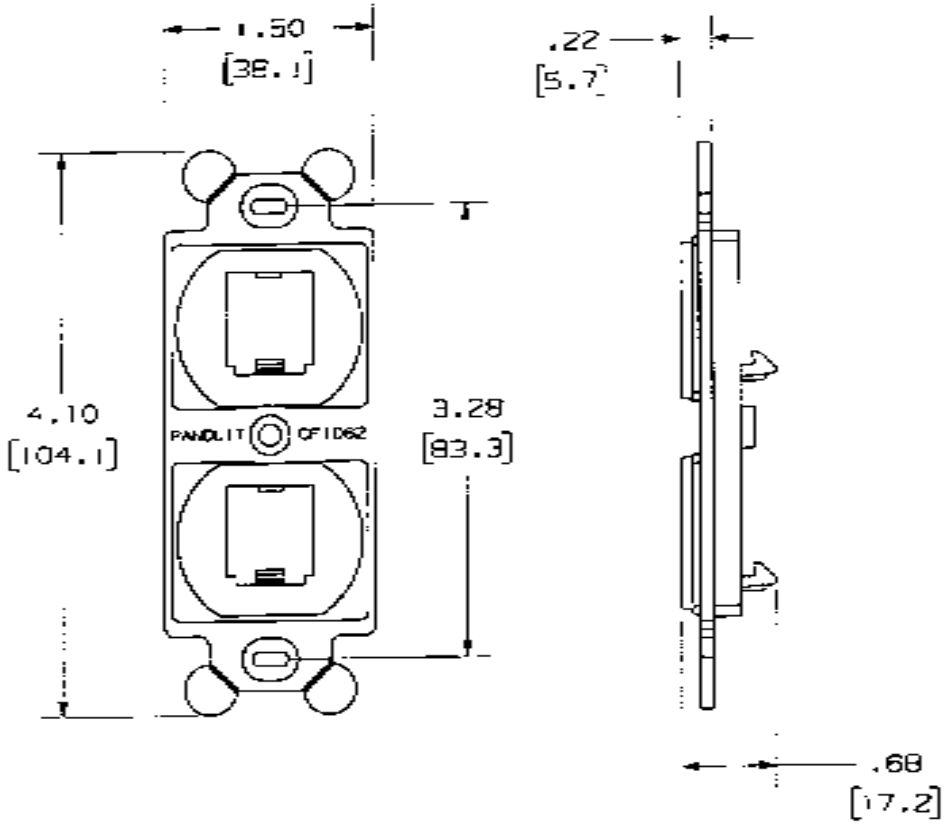

PANDUIT P/N	WEIGHT
CF1062**Y	.25 LB/10 PCS (115.7 g/10 PCS)

NOTES:
1. SEE CURRENT CATALOG FOR ADDITIONAL PART NUMBER SUFFIXES TO INDICATE COLOR AND OR PACKAGE QUANTITY.
2. SEE CATALOG FOR COMPLETE LIST OF PARTS APPLICABLE FOR USE WITH THIS PART.
3. DIMENSIONS IN PARENTHESES ARE IN METRIC.
4. PART INCLUDES:
   1- 106 FRAME
   2- MOUNTING SCREW

MODEL FILENAME: M0089475A_CF1062_02.PRT
DRAWING FILENAME: W0247900_DC176.00A.PRT
SIZE: A

MINI-COM 2 POSITION "106" SERIES FRAME CUSTOMER DRAWING

PANDUIT™ CORP.
TINLEY PARK, ILL 60477

THIRD ANGLE PROJECTION

ALL DIMENSIONS ARE GIVEN IN INCHES. UNLESS OTHERWISE SPECIFIED
DIMENSIONAL TOLERANCES ARE:
1.XX ± 1.XXX ±
1.XX ± ANGLES ±

DRAWN BY: JSP
DATE: 4-18-06
CHK'D:
MATERIAL: ABS

T.I. NUMBER: N/A
PRODUCT SPEC: N/A
WORK INSTRUCTION: N/A
SCALE: NONE
PART NO.: CF1062**Y
DRAWING NO.: 02479-176

NETWORK SYSTEMS
MAY 25 2006
ENGINEERING DEPT

REV	DATE	BY	CHK	DESCRIPTION	ECN	R	QUAL	SUP	OTH
F	4-18-06	JSP		RELEASED TO PRODUCTION	02479-176				