THIS COPY IS PROVIDED ON A RESTRICTED BASIS AND IS NOT TO BE USED IN ANY WAY DETRIMENTAL TO THE INTERESTS OF PANDUIT CORP.

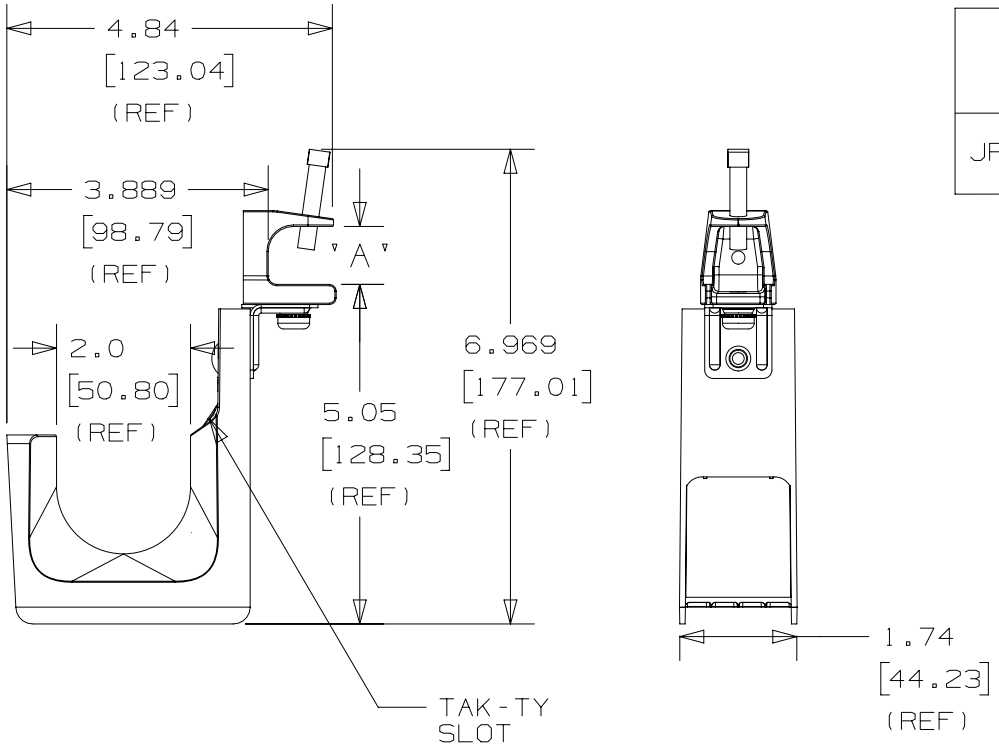

PANDUIT PART NO.	"A"	WEIGHT 10pcs lbs (g)
JP2SBC87RB-___	0.812 - 0.912 [20.6 - 23.2]	3.96 (1797)

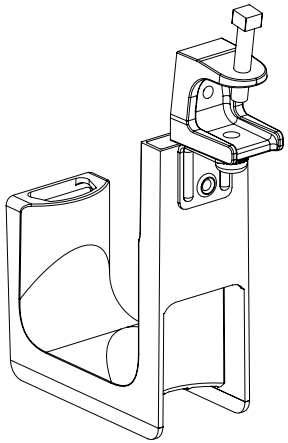

NOTES:
1. SEE CURRENT PRICE SHEET FOR PART NUMBER SUFFIX DESIGNATION FOR PACKAGE SIZE AND PRODUCT COLOR.
2. HOOK MATERIAL: NYLON 6/6
   ANGLE BRACKET MATERIAL: PRE-GALVANIZED STEEL
   RIVET MATERIAL: ALUMINUM
   CLAMP MATERIAL: PLATED IRON
   BOLT/WASHER MATERIAL: ZINC PLATED STEEL
3. PRODUCT IS DESIGNED TO SUPPORT A MAXIMUM OF 2" (50.8) DIAMETER BUNDLE. MAXIMUM RECOMMENDED STATIC LOAD: 30 lbs.
4. PRODUCT INCORPORATES FEATURES ALLOWING USER TO RETAIN CABLE BUNDLES IN J-PRO J-HOOK WITH TAK-TY CABLE TIES UP TO 3/4" WIDE.
5. PRODUCT MARKINGS:
   cULus logo and statement:
   "SUITABLE FOR USE IN AIR HANDLING SPACES IN ACCORDANCE WITH SECTION 300-22 (C) & (D) OF THE NATIONAL ELECTRIC CODE."
   ULC logo and statement:
   "IN ACCORDANCE WITH CAN/ULC S-102.2-10 IN SINGLE UNITS OR PAIRS, 4 ft (1220mm) MIN. SPACING, FSR=0, SDC=35."

REV	DATE	BY	CHK	APR	DESCRIPTION	ECN
00	2/4/2013	DBLA	CLW	KLN	INITIAL RELEASE	GAECN00426

TITLE
J-PRO J-HOOK WITH 360° SCREW-ON BEAM CLAMP (JP2SBC87RB-___)
CUSTOMER DRAWING

ITEM REVISION NAME: 12I031AS/00
DATASET FILE NAME: 12I031AS_DC_C11038/00A

UNLESS OTHERWISE SPECIFIED, DIMENSIONAL TOLERANCES ARE: IN [mm]
.X ± .1 [2.54] .XXX ± .005 [.127]
.XX ± .01 [.25] ANGLES ± 5 °
THIRD ANGLE PROJECTION

MATERIAL: SEE NOTE 2
DRAWING NUMBER: C11038

DRAWN BY	DATE	CHK	SCALE	SHT 1 OF 1	SIZE
DBLA	2/1/2013	KLN	NONE		A

D10100DA/12