ViewZ
www.viewzusa.com

VZ-RMK08

RACK MOUNT

ViewZ Monitor Size
8” ~20”

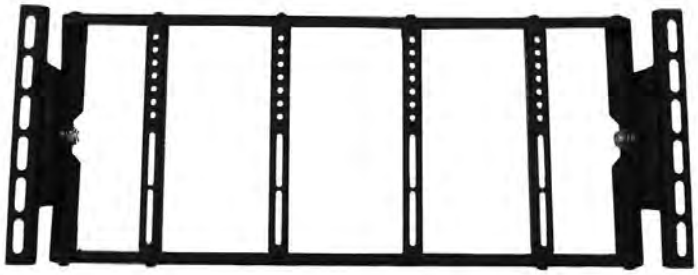

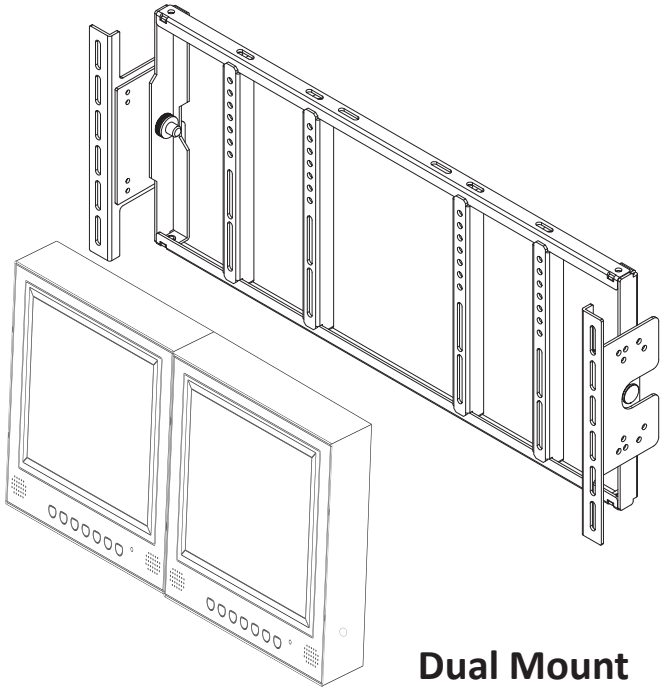

Dual Mount

8"–20" | 20 lbs | +/–35° | 75 x 75 Min. | 100 x 100 Max.

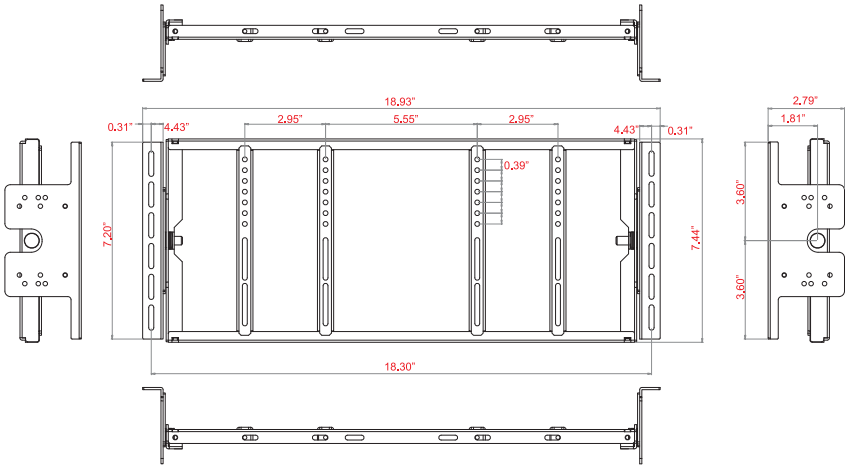

VZ-RMK08 ADVANTAGES:

- Universal Mount Fits All 8.4-20” Displays
- VESA Compatible 75mm-100mm
- Tilt up to 35° for Best View
- Depth Adjustability from 1.45-3.14”
- Save Rack Space
- Dual Mount any 8” LCD Monitors

MODEL #	VZ-RMK08
Display Range	8"- 20"
Weight Capacity	20.4 lbs. (9.25kg)
Width	18.93”
Height	7.20”
Tilt	+/-35°
Mounting Pattern Type	VESA
Mounting Patterns	75 x 75mm (Min) - 100 x 100mm (Max)

Contact ViewZ

- Address: 177 W. Orangethorpe Ave., Placentia, CA 92870
- Phone: (714)996-1177, Fax: (714)996-1138
- Sales: sales@viewzusa.com

- Specifications subject to change without notice.