THIS COPY IS PROVIDED ON A RESTRICTED BASIS AND IS NOT TO BE USED IN ANY WAY DETRIMENTAL TO THE INTERESTS OF PANDUIT CORP.

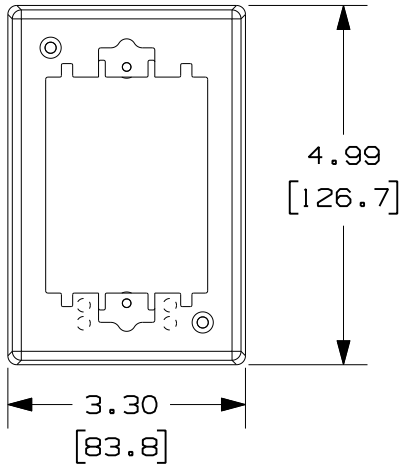

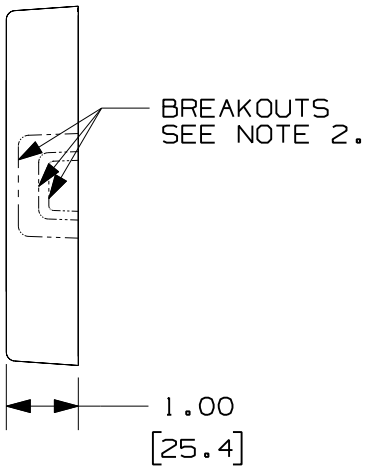

PANDUIT PART NUMBER	WEIGHT	VOLUME CU.IN./CC
JBP1E	0.15 LB/ PC (68.9 g/ PC)	12.5 [205]

NOTES:

1. SEE CURRENT CATALOG FOR ADDITIONAL PART SUFFIXES TO INDICATE COLOR AND OR PACKAGE QUANTITY.
2. BREAKOUTS FOR LDS AND LDPH RACEWAYS ARE PROVIDED ON ALL FOUR SIDES IN THE BASE AND COVER.
3. COVER IS EXTENDED OUT AND DOWN AROUND SIDES OF BASE WHEN ASSEMBLED.
4. DIMENSIONS IN PARENTHESES ARE IN METRIC.
5. BREAKOUTS TO ACCOMODATE CONDUIT SIZES OF 1/2", 3/4" & 1" DIAMETERS.

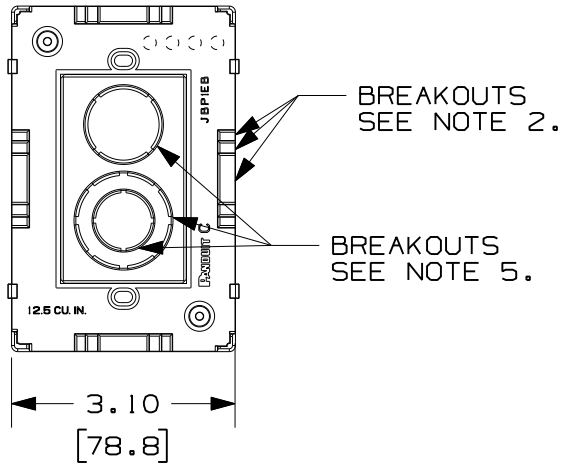

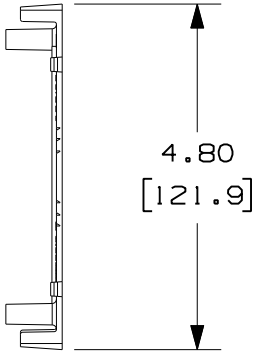

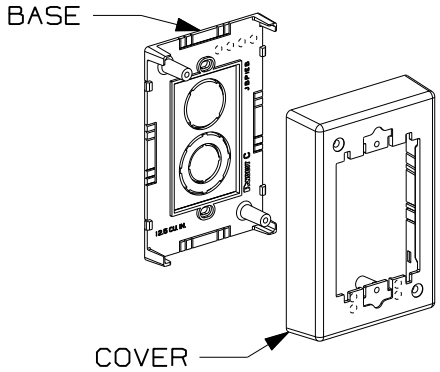

A

REV	DATE	BY	CHK	DESCRIPTION	ECN	CHK	CUST	SUP
1	10-19-09	BDK	RMHI	A. REVISED AND REDRAWN	36085-05	RMHI	RTFI	
R	12-10-98	DW	JAWA	RELEASED TO PRODUCTION	36085-05	HIW	HIW	

CAD FILENAME/LAYERS: D36085BE_DC_JBP1_00B

PANDUIT CORP. TINLEY PARK, ILLINOIS

EXTENSION JUNCTION BOX
SINGLE GANG (JBP1E)
CUSTOMER DRAWING

UNLESS OTHERWISE SPECIFIED, DIMENSIONAL TOLERANCES ARE:
(.X) ± (.XXX) ±
(.XX) ±.03(.8) ANGLES ±

UNLESS OTHERWISE SPECIFIED, ALL DIMENSIONS ARE GIVEN IN INCHES, THIRD ANGLE PROJECTION.

DRAWN BY: DW
DATE: 12-10-98
CHECKED BY: JAWA
MAT'L: PVC
SCALE: NONE
DRAWING NO.: 36085-05
DWG SIZE: A