THIS COPY IS PROVIDED ON A RESTRICTED BASIS AND IS NOT TO BE USED IN ANY WAY DETRIMENTAL TO THE INTERESTS OF PANDUIT CORP.

PANDUIT P/N	WEIGHT
CFPFLSIS**	.19LB /10 PCS (87.1g /10 PCS

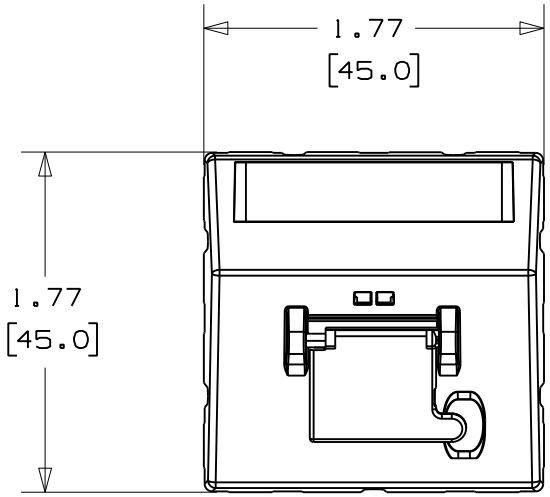

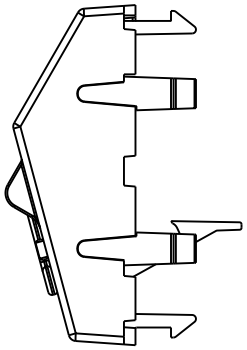

NOTES:
1. SEE CURRENT CATALOG FOR ADDITIONAL PART NUMBER SUFFIXES TO INDICATE COLOR AND/OR PACKAGE QUANTITY.
2. SEE CATALOG FOR COMPLETE LIST OF PARTS APPLICABLE FOR USE WITH THIS PART.
3. DIMENSIONS IN [ ] ARE IN METRIC.
4. PART INCLUDES:
   1- LABEL
   1- LABEL COVER

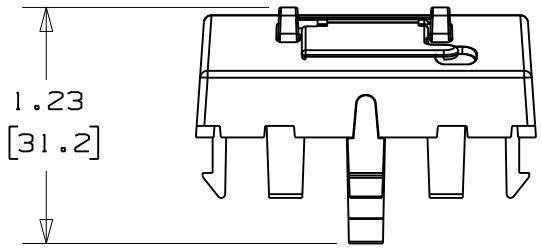

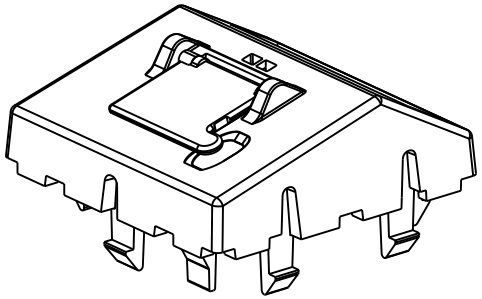

REV	DATE	BY	CHK	DESCRIPTION	ECN - R	CUST	SUP	OTH
1	7-16-07	JsP	TCK	A. REVISED ADAPTER, ADDED SMALL SLOT RELIEFS ON BOTTOM OF PART	02615-06 TCK	TCK		TCK
R	4-30-07	JsP	TCK	RELEASED TO PRODUCTION	02615-06 TCK	TCK		TCK

MODEL FILENAME: M02615AB/03

DRAWING FILENAME: M02615AB_DC/03A

SIZE: A

MINI-COM 1 POSITION 45 X 45mm
SLOPED SHUTTERED FRENCH ADAPTER
WITH LABEL AND ICON SLOTS
CUSTOMER DRAWING

PANDUIT™ CORP.
TINLEY PARK, ILL 60477

THIRD ANGLE PROJECTION

ALL DIMENSIONS ARE GIVEN IN INCHES, UNLESS OTHERWISE SPECIFIED.

DIMENSIONAL TOLERANCES ARE:
(.X) ±.03 (.XXX) ±.005
(.XX) ±.01 ANGLES ± 1°

DRAWN BY: JsP

DATE: 4-30-07

CHK'D: TCK

MATERIAL: ABS

I.I. NUMBER: N/A

PRODUCT SPEC/ PKG SPEC: N/A

ASSY METHOD/ TEST METHOD: N/A

SCALE: NONE

PART NO.: CFPFLSIS**

DRAWING NO.: 02615-06