computar

M5018-MP2

f=50mm F1.8
for 2/3 type Megapixel Cameras
C-Mount

Model No.		M5018-MP2		Effective Lens Aperture	Front	φ25.5mm	
Focal Length		50mm			Rear	φ9.6mm	
Max. Aperture Ratio		1:1.8		Distortion	2/3type	-0.3%(y=5.5)	
Max. Image Format		8.8mm x 6.6mm(φ11mm)			1/2type	-0.2%(y=4.0)	
Operation Range	Iris	F1.8- F16C		Back Focal Length		13.1mm	
	Focus	0.5m - Inf.		Flange Back Length		17.526mm	
Control	Iris	Manual		Mount		C-Mount	
	Focus	Manual		Filter Size		M30.5 P=0.5mm	
Object Dimension at M.O.D	2/3type	8.7cm x 6.5cm		Dimensions		φ33.5mm x 38.2mm	
	1/2type	6.3cm x4.8cm		Weight		85g	
Angle of View	D	2/3 type	13.1°	1/2 type	9.5°		
	H		10.5°		7.6°		
	V		7.9°		5.7°		
Operating Temperature		-10℃ - +50℃					

M.O.D : Minimum Object Distance
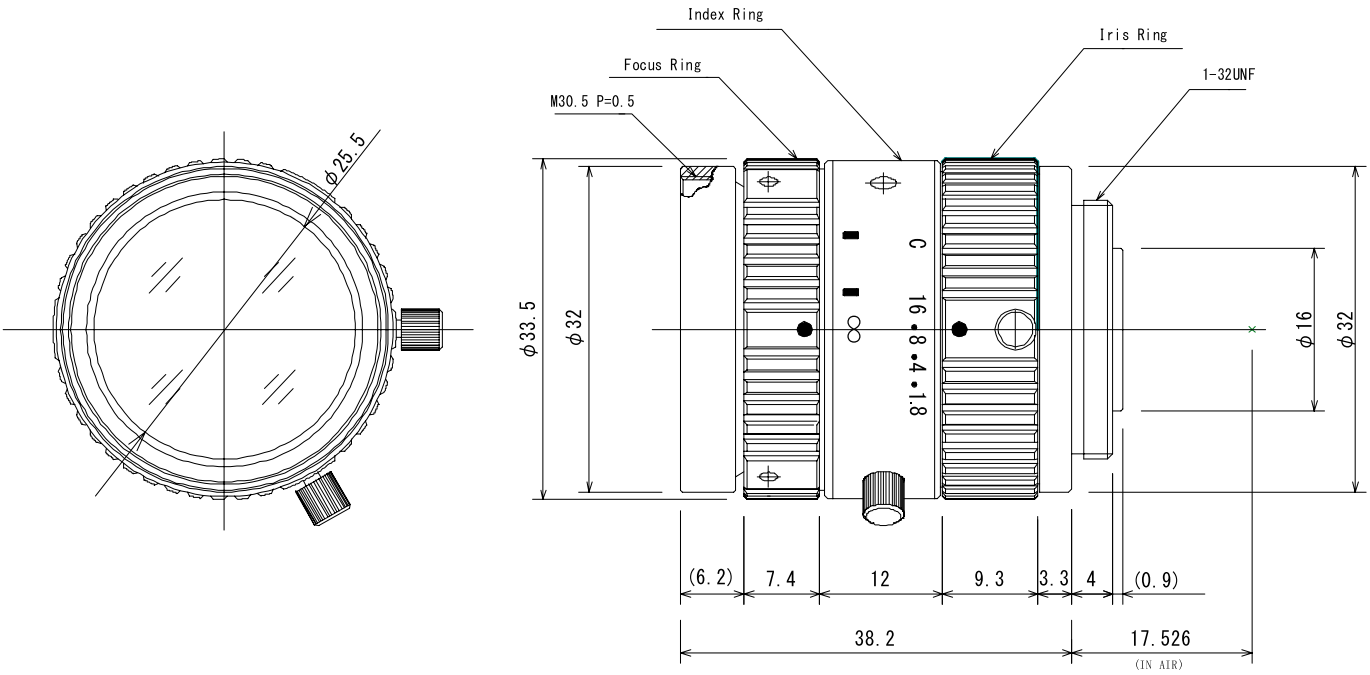
Dimensions