REVISION HISTORY				
ZONE	REV	DESCRIPTION	DATE	APPROVED
All	7	Released	8/15/2012	EAS

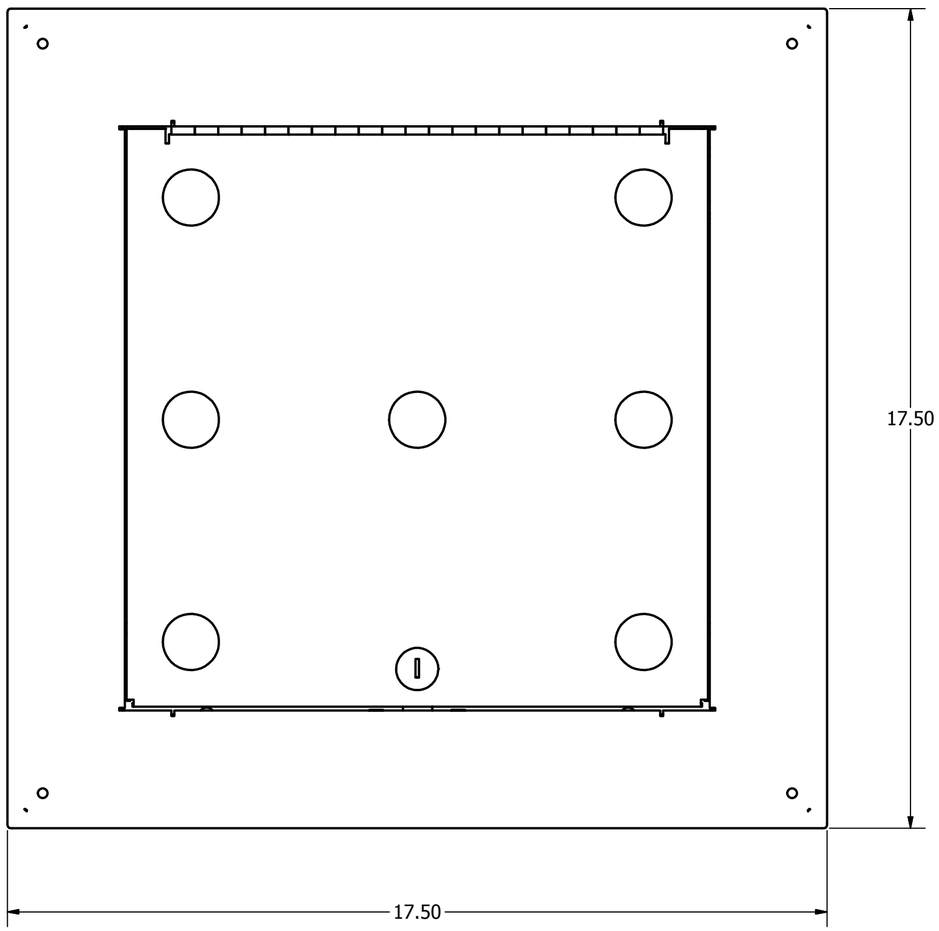

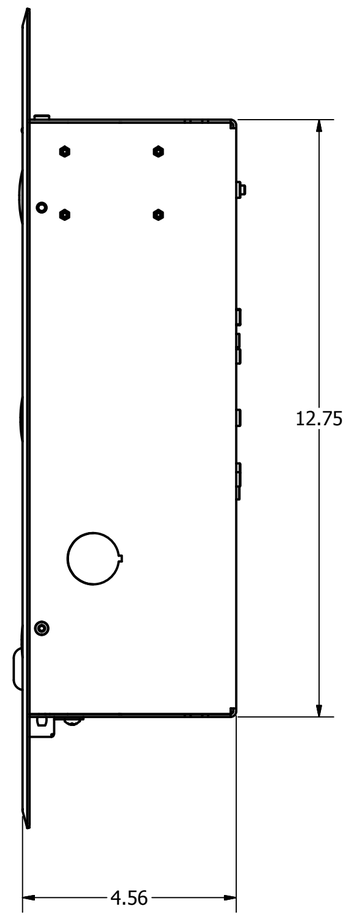

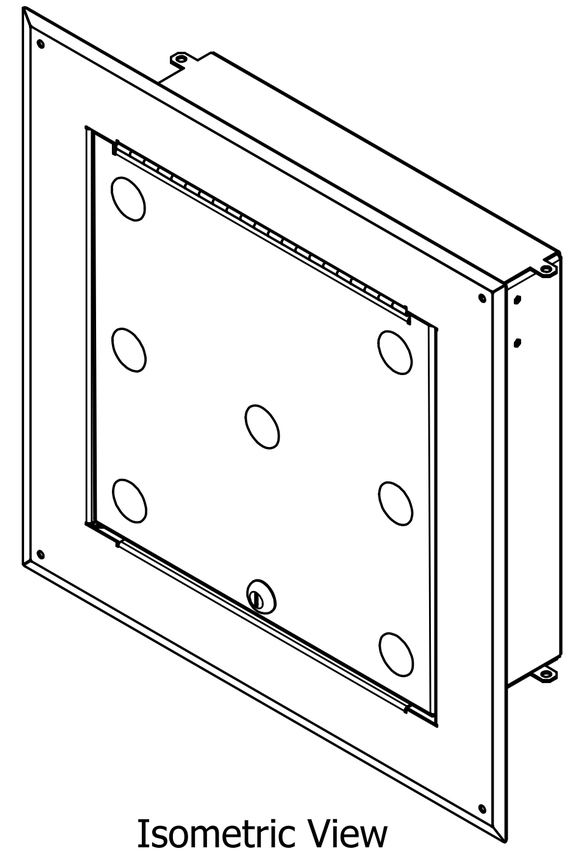

Isometric View

NOTE:
- Material: Flange 18 Ga. Steel
  Back Box 16 Ga. Galvanized Steel
  Door 14 Ga. Steel
- Finish: White Powder Coat
- Weight: 12 lbs.

DRAWN EAS	8/15/2012	Oberon, Inc. - 1315 S. Allen St. - State College, PA 16801
CHECKED EAS	8/15/2012	TITLE
QA		Model 1027-00 Customer Print
MFG EAS	8/15/2012	
APPROVED EAS	8/15/2012	SIZE C / DWG NO 1027-00 / REV 7
TOLERANCE: .0 = +/- .030, .00 = +/- .015, .000 = +/- .005		SCALE / SHEET 1 OF 1