REVISION HISTORY			
REV	DESCRIPTION	DATE	APPROVED
1	ECO-01952	6/1/2007	WSS
2	ECO-02010	8/1/07	WSS
3	ECO-02345	8/11/2008	FED

Bill of Material					
ITEM	PART NUMBER	QTY	DESCRIPTION	FILE NAME	REVISION
1	HINGEM	3	HINGE, MALE PORTION, WITH WASHER	I000538.iam	0
2	H01-069	6	SCREW, 10-32x3/8" PH FLAT TYPE 23 BLACK OXIDE/WAX RoHS	SCR1032X375FHBLK23.ipt	
3		1	SPLIT MESH DOORS FOR 84H x 29W E	I005469.iam	2

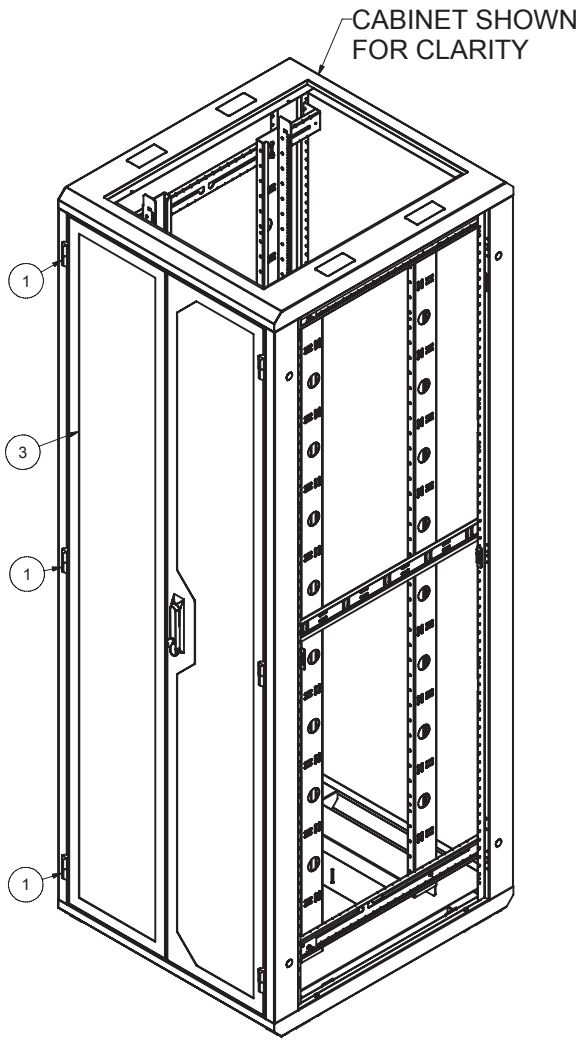

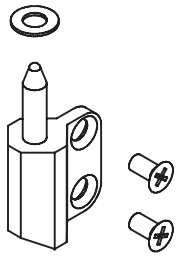

DETAIL B
SHIP ITEMS #1 & 2 LOOSE
AS A HARDWARE

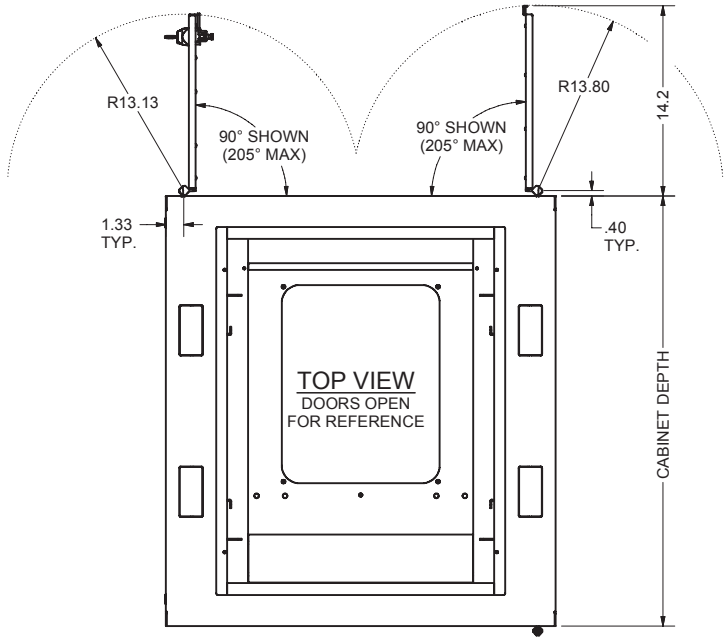

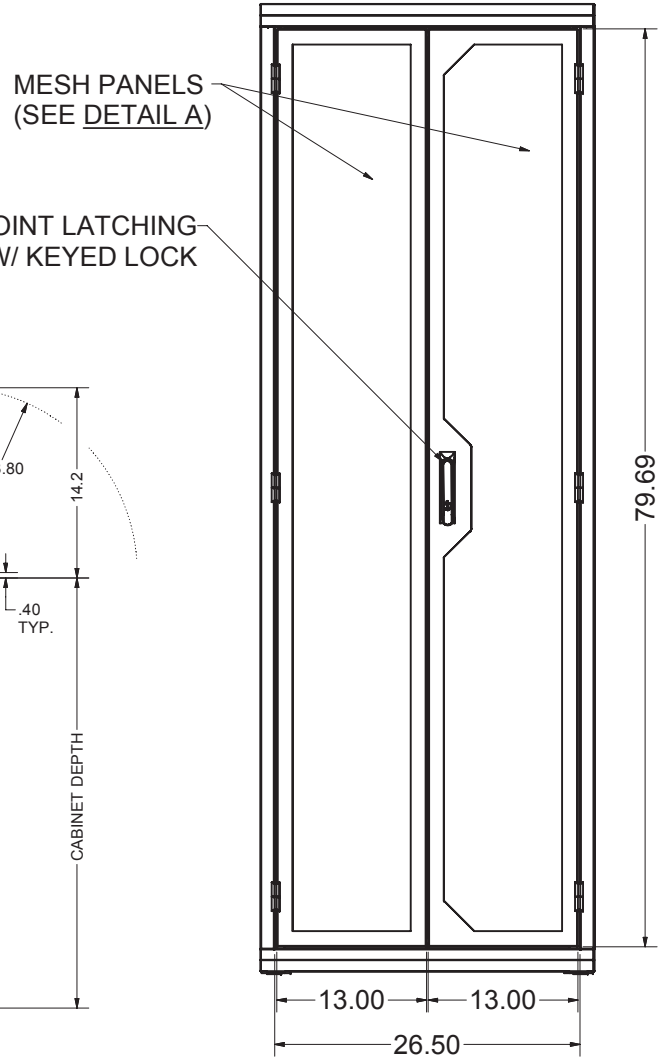

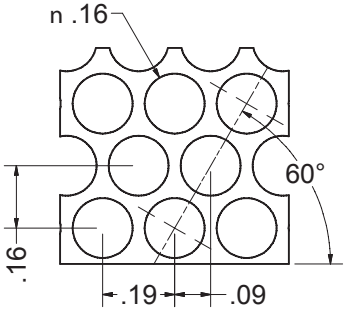

DETAIL A

DOOR SPECIFICATIONS:

- DOOR AND MESH PANEL = 16 GA CRS

- DOOR COMPATIBLE WITH GLCC OPTIONAL HANDLES. XHGLCC SWING HANDLE STANDARD.

INTERPRET DRAWING PER ASME Y14.5M-1994
DIMENSIONAL LIMITS APPLY AFTER APPLICATION OF FINISH
DRAWING NOT TO SCALE
TOLERANCE UNLESS OTHERWISE NOTED:
ANGULAR +/- 1~
.XXXX +/- .010
.XXX +/- .015
.XX +/- .030
.X FOR REF. ONLY

THIRD ANGLE PROJECTION

UNLESS OTHERWISE SPECIFIED
ALL DIMENSIONS ARE IN INCHES

NOTICE:

Use of this document is subject to a confidentiality and nondisclosure agreement with Great Lakes Case & Cabinet Co., Inc. (GLCC) and may not be reproduced, disclosed or utilized in whole or in part without prior written authorization from GLCC.

PART NUMBER: **8402E29SM**
QTY PER UNIT: 1
MATERIAL TYPE: -
MATERIAL GAUGE: **#16 GA**
FINISH: -
DRAWN JAL DATE 8/11/2008
CHECKED & APP. WSS DATE 5/31/2007

TITLE **SPLIT MESH DOOR SET, COMPLETE, FOR 84"H x 29"W ENHANCED ENCLOSURE**

GREAT LAKES CASE & CABINET CO., INC.
P.O. BOX 551 EDINBORO, PA 16412
PHONE (814) 734-7303 FAX (814) 734-3907
E-MAIL glcc@greatcabinets.com

DWG NO: I005468 REV 3 SHEET: 1 OF 1