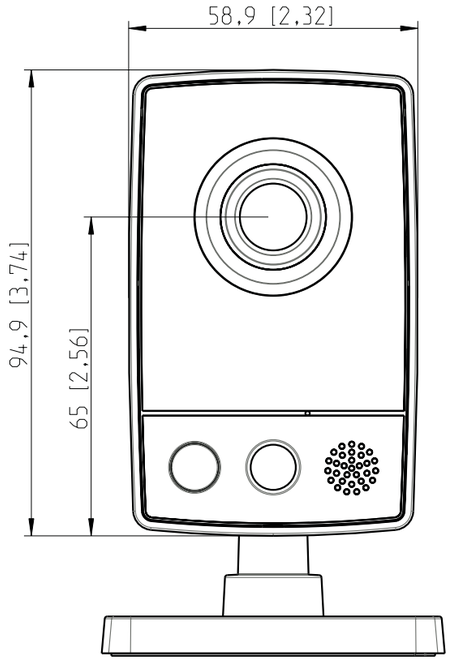

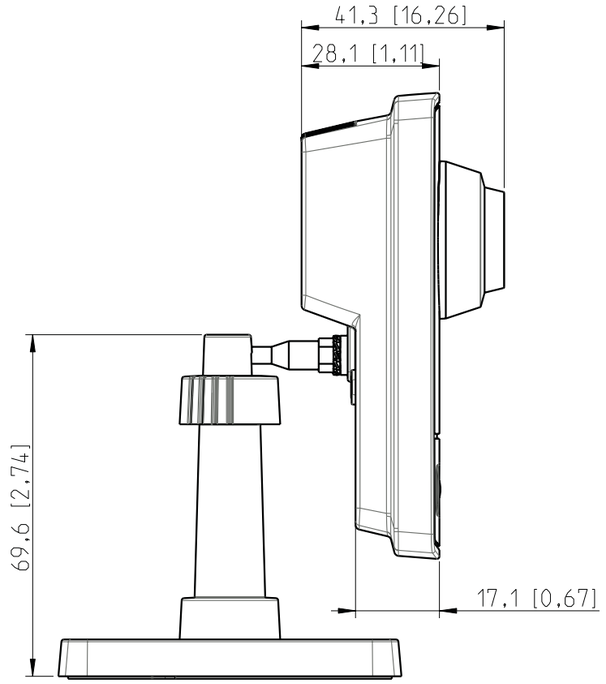

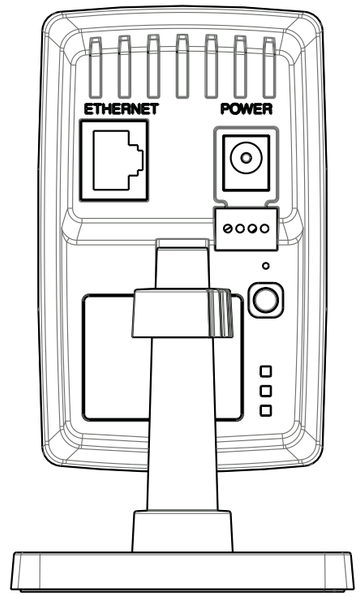

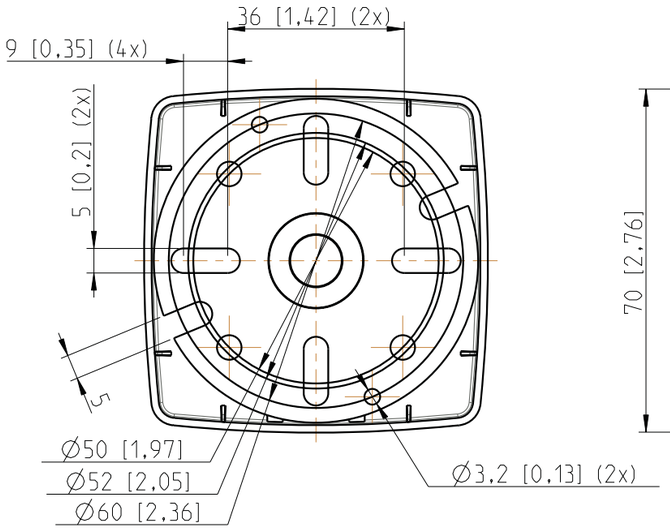

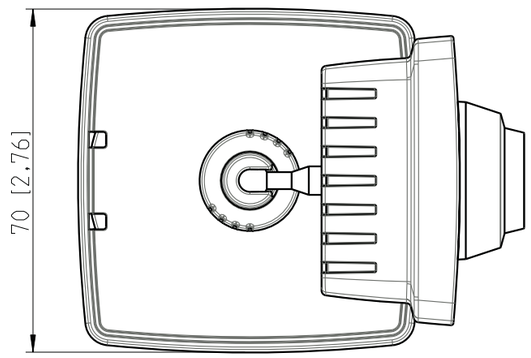

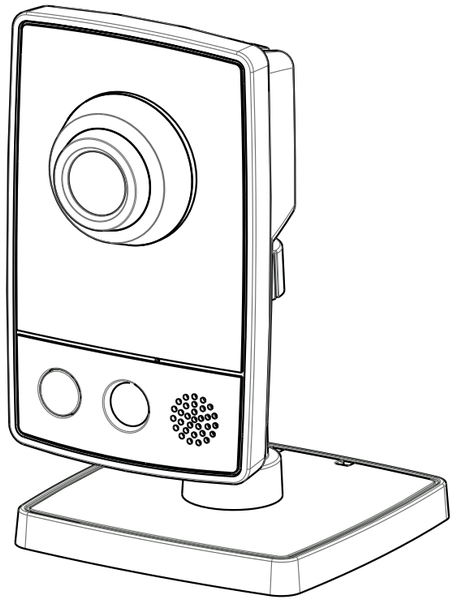

AXIS M1054 - Network Camera

5 MAY, 2010