Technical performance data acc. to IEC 60268-5

	LBC 3482/00	LBC 3483/00	LBC 3484/00
Maximum power	37.5 W	52.5 W	75W
Rated power	25 W (25-12.5-6.25 W)	35 W (35-17.5-8.75 W)	50W (50-25-12.5W)
Sound pressure level at rated power/1W (at 1kHz,1m)	121/107 dB (SPL)	127/112 dB (SPL)	130 dB/110 dB (SPL)
Effective frequency range (-10 dB)	550 Hz to 5 kHz	380 Hz to 5 kHz	350 Hz to 4 kHz
Opening angle (at 1kHz/4kHz, -6dB)	70° / 25°	50° / 25°	60° /28°
Rated input voltage	100 V	100 V	100 V
Rated impedance	400 Ω	286 Ω	200 Ω
Ambient temperature range	-25°C +55°C	25°C +55°C	-25°C to +55 °C
Water-and dust protected	acc. to IEC 60529 IP 65	acc. to IEC 60529 IP 65	acc. to IEC 60529 IP65
Safety	acc. to EN 60065	acc. to EN 60065	acc. to EN 60065
Connection	screw terminal block	screw terminal block	screw terminal block
Cable dia.	6 mm (min) - 12 mm (max)	6 mm (min) - 12 mm (max)	6mm(min)-12mm(max)
Dimension			
Overall length	425 mm (16.7 in)	499 mm (19.6 in)	449 mm (19.6 in)
Aperture dia	355 mm (14 in)	490 mm (20 in)	490 mm (20 in)
Colour	Light grey (RAL 7035)	Light grey (RAL 7035)	Light grey (RAL 7035)
Weight	3.6 kg (8 lb)	4.5 kg (10 lb)	6 kg (13.22 lb)

Technical performance data acc. to IEC 60268-5

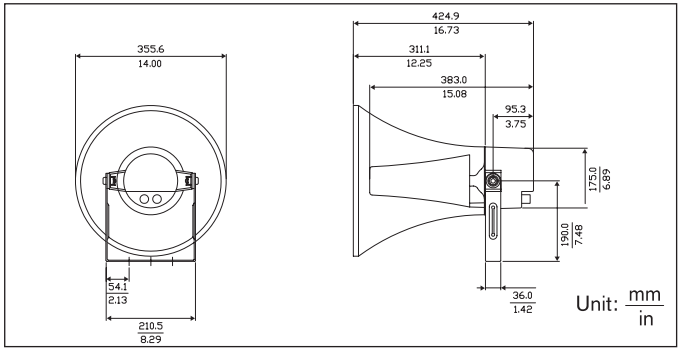

Dimensions (in mm and inches) for LBC 3482/00

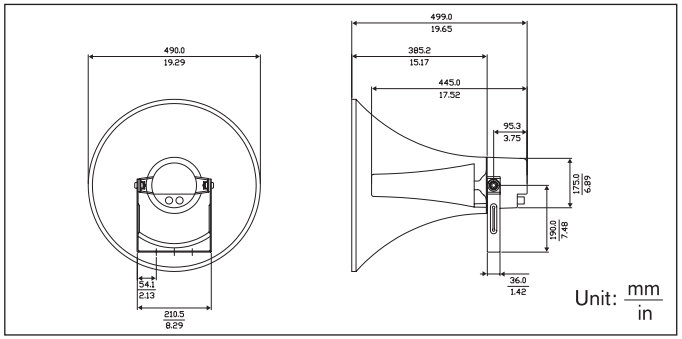

Dimensions (in mm and inches) for LBC 3483/00&LBC 3484/00

Frequency response

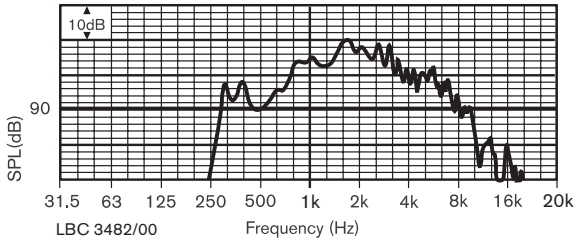

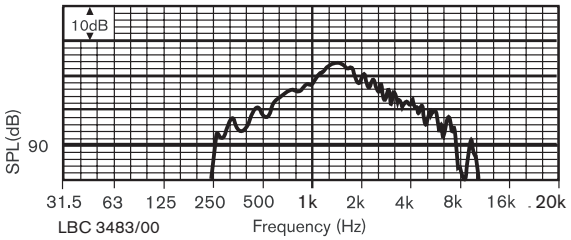

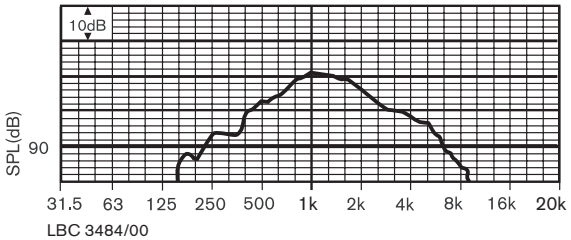

Horn Loudspeaker

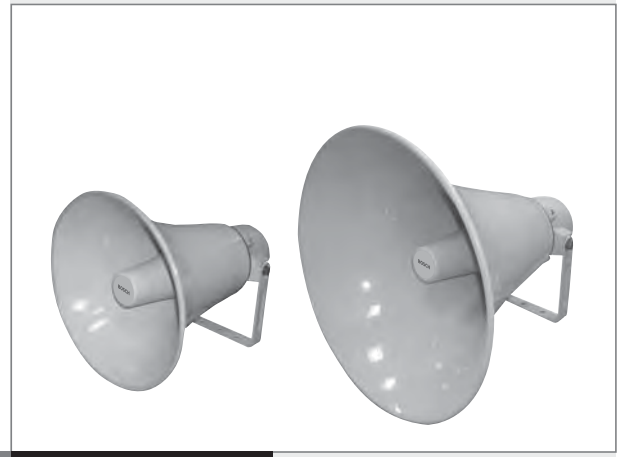

EN | Installation and User Instructions
LBC 3482/00
LBC 3483/00
LBC 3484/00

3988 988 09111/05
©2005 Bosch Security Systems Data subject to change without notice.

BOSCH

Polar diagram(measured with pink noise)

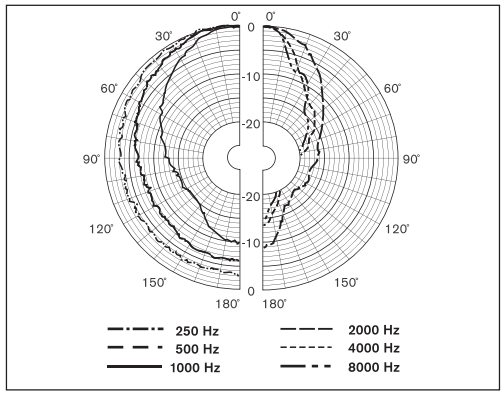

LBC 3482/00

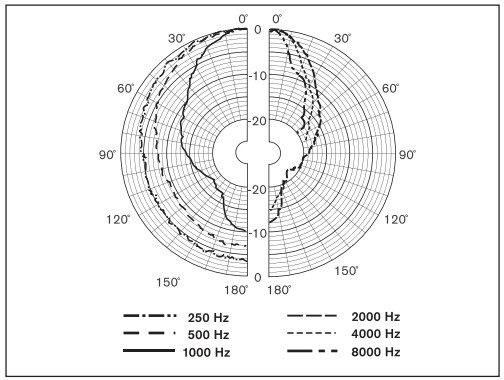

LBC 3483/00

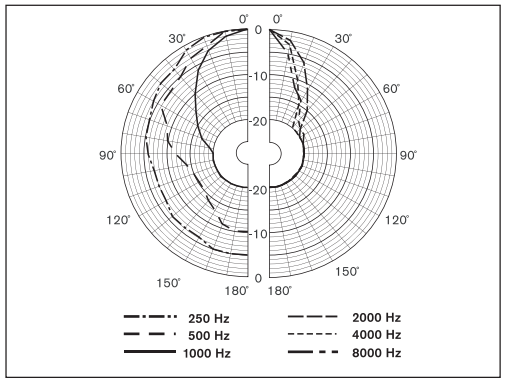

LBC 3484/00

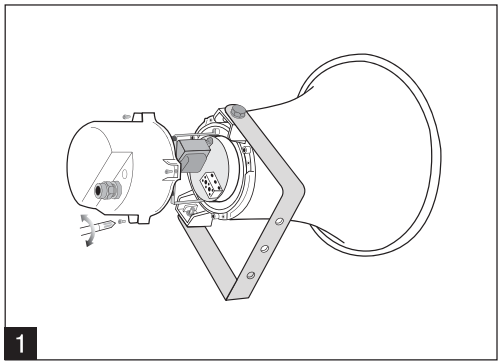

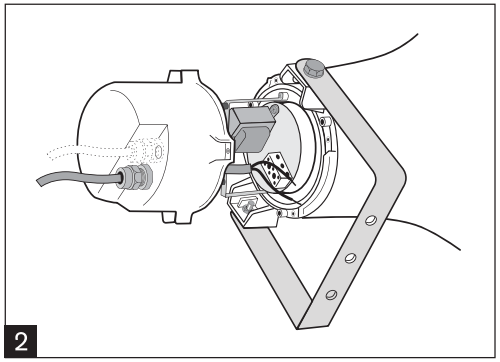

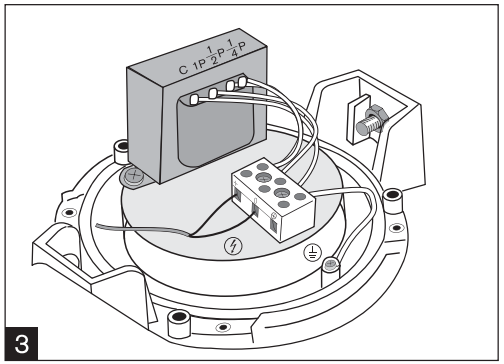

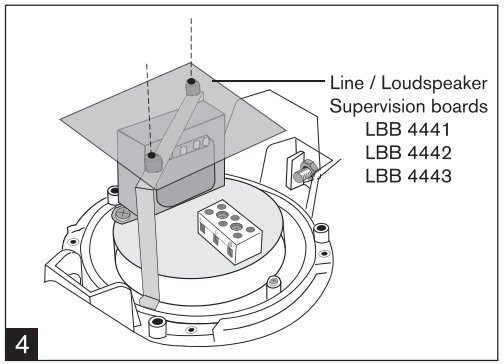

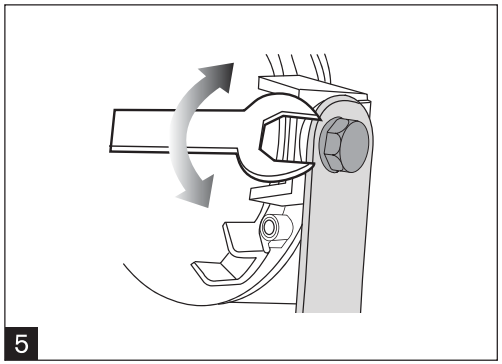

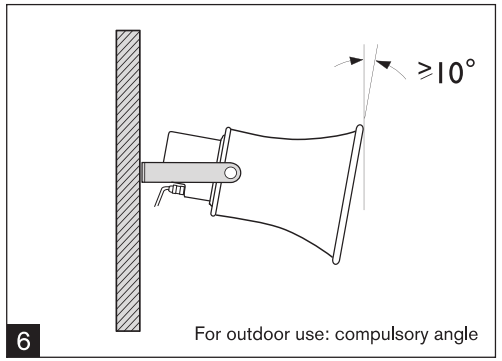
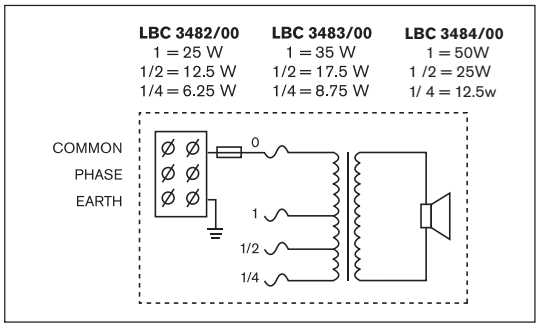
Circuit diagram