Ceiling Loudspeakers

LC4-UC06E, LC4-UC12E and LC4-UC24E

BOSCH

en Installation Note

1 Installation

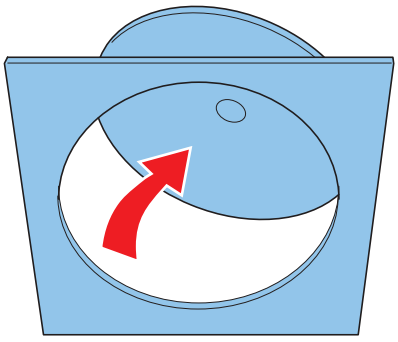

Fig. 1

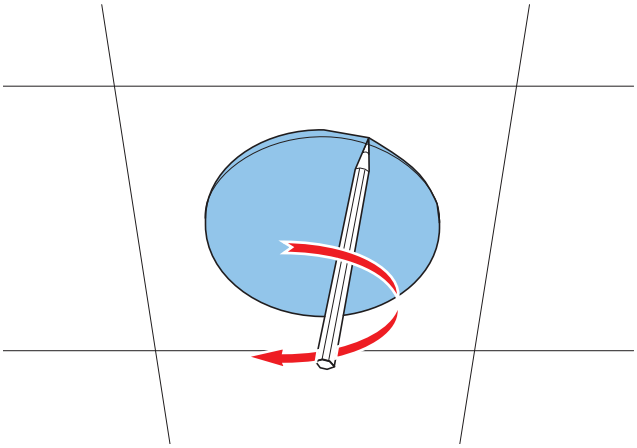

Fig. 2

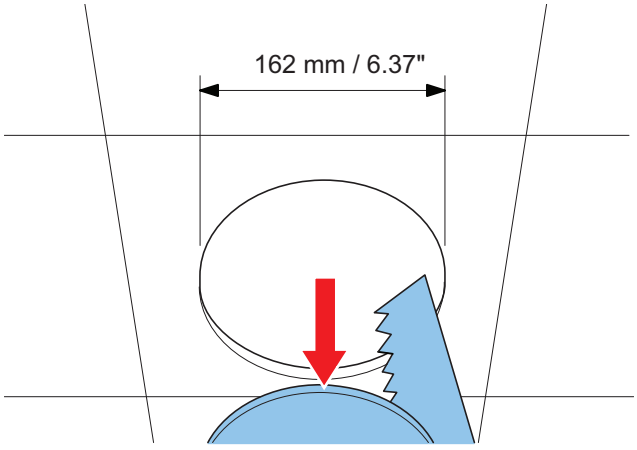

Fig. 3

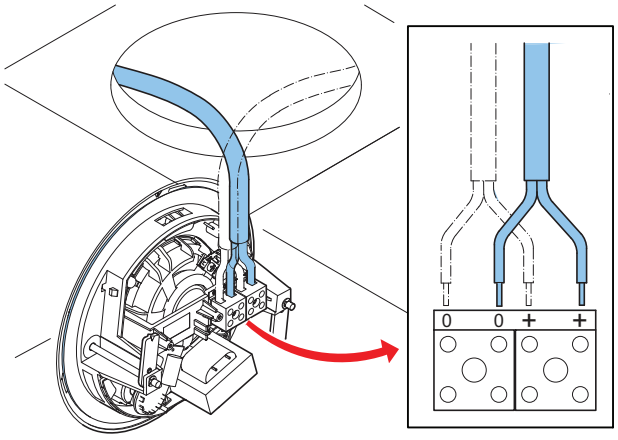

Fig. 4

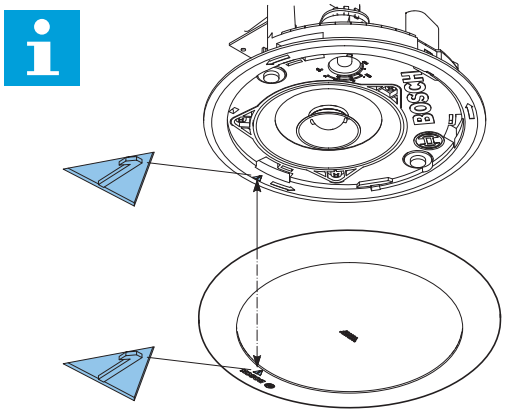

Fig. 5

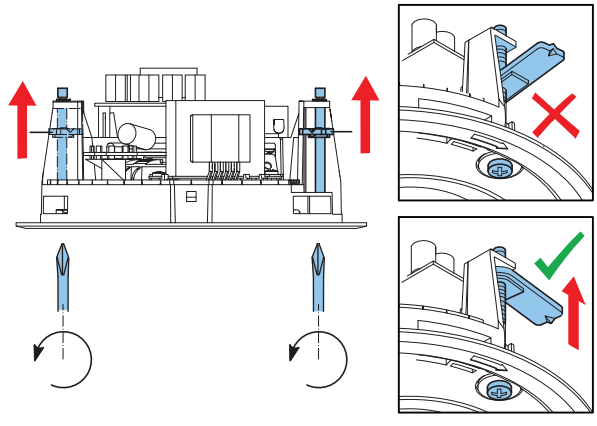

Fig. 6

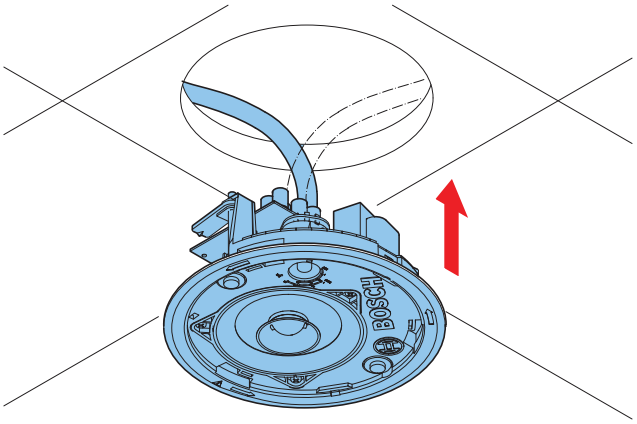

Fig. 7

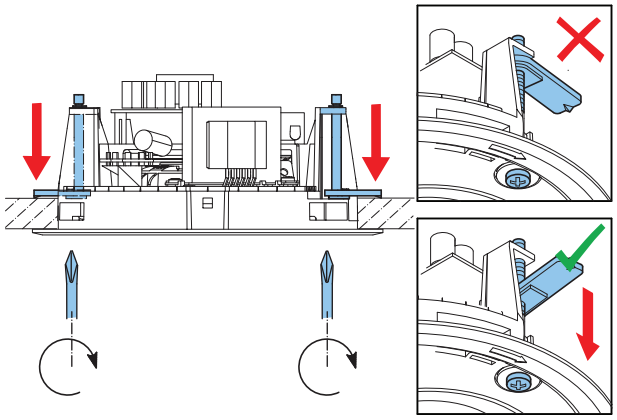

Fig. 8

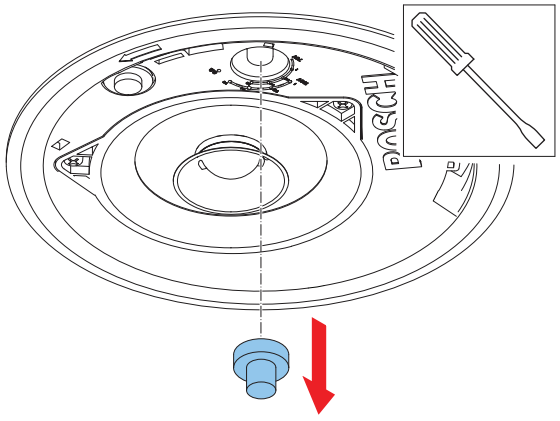

Fig. 9

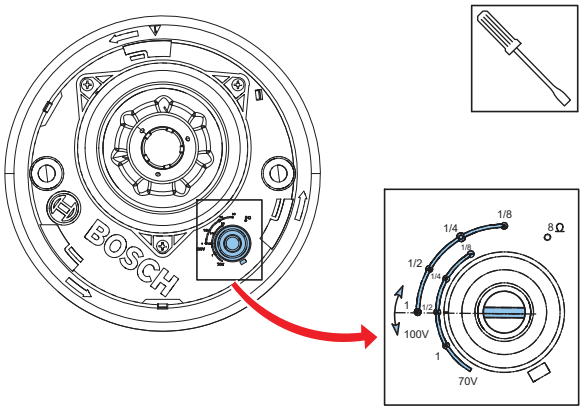

Fig. 10

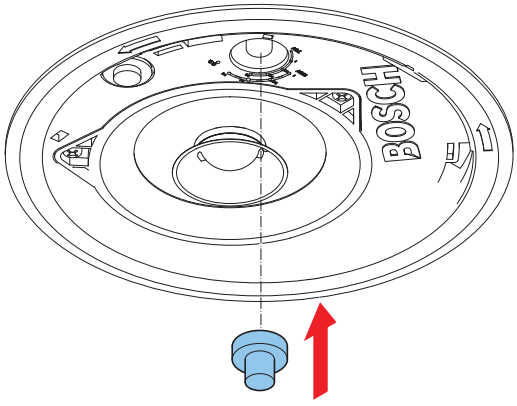

Fig. 11

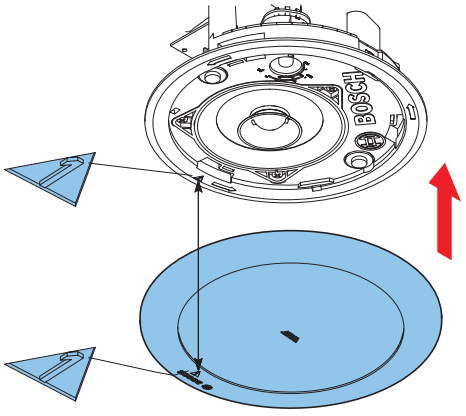

Fig. 12

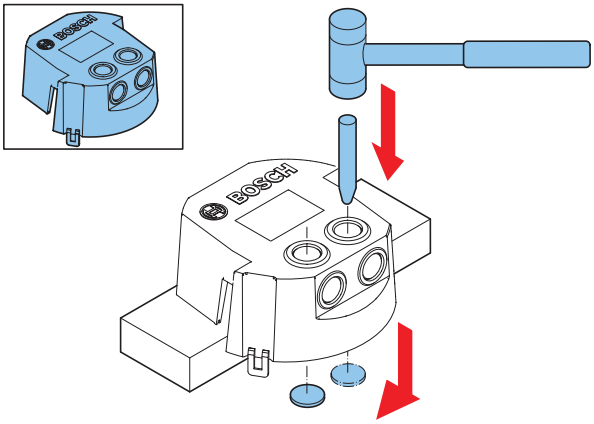

Fig. 13
LC4-CBB

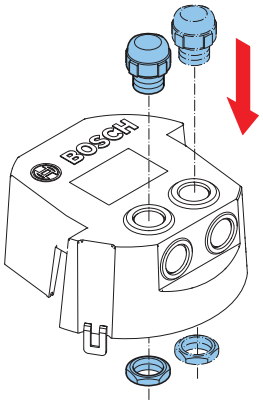

Fig. 14

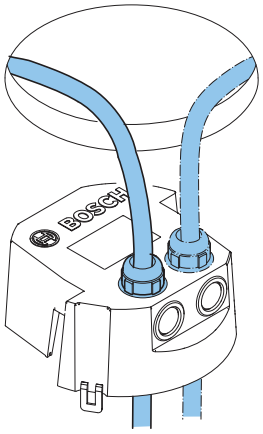

Fig. 15

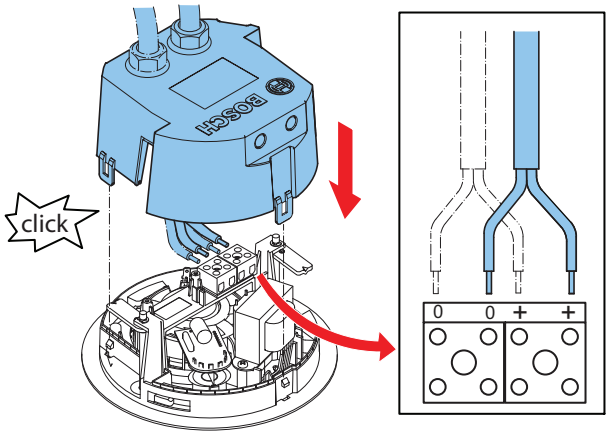

Fig. 16
Next steps: fig 5-12

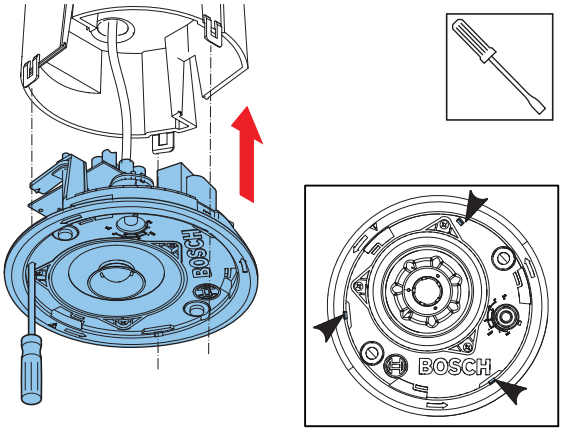

Fig. 17

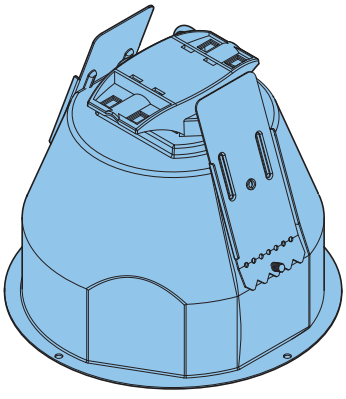

Fig. 18
LC4-MFB

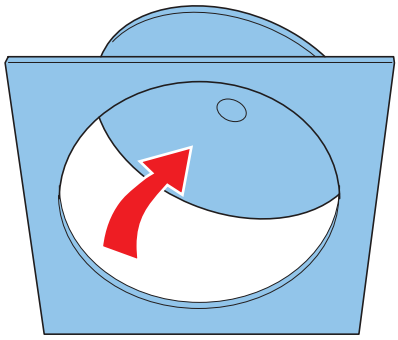

Fig. 19

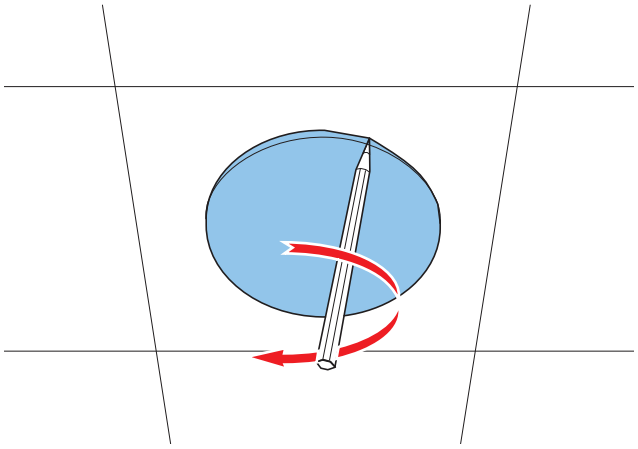

Fig. 20

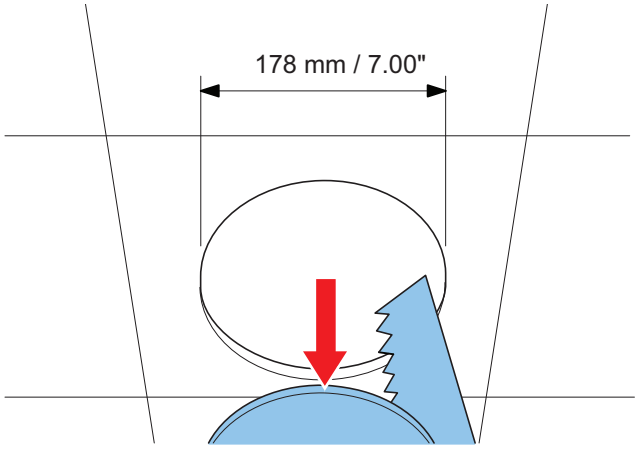

Fig. 21

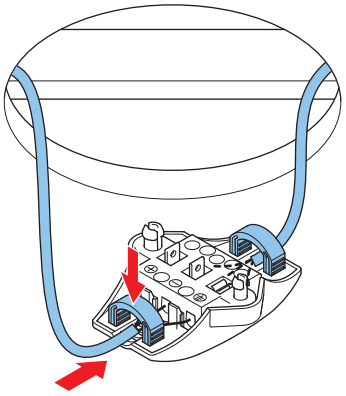

Fig. 22

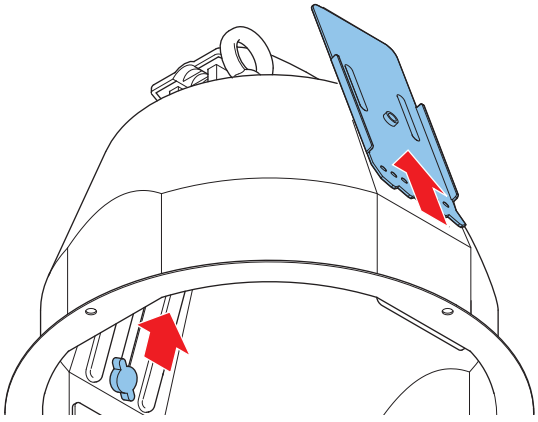

Fig. 23

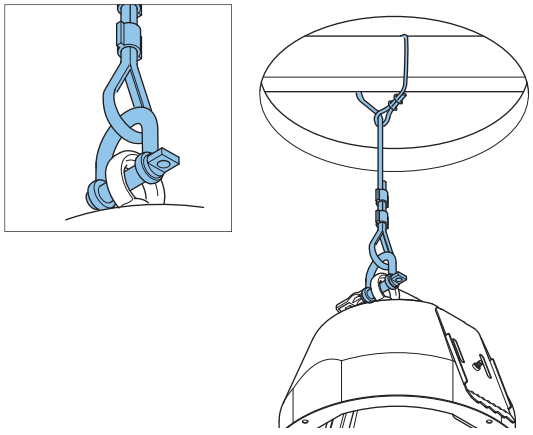

Fig. 24

Optional

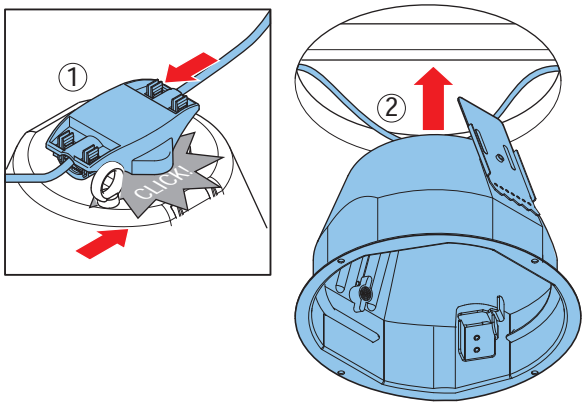

Fig. 25

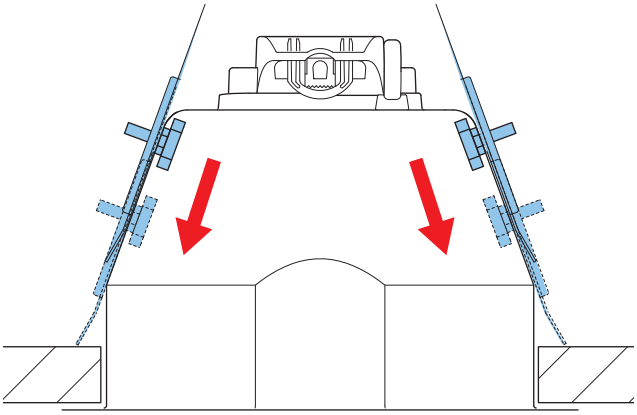

Fig. 26

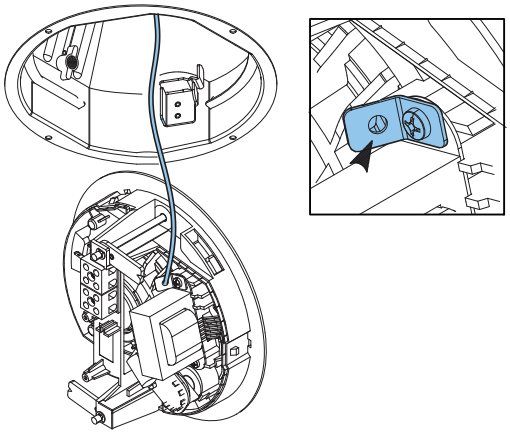

Fig. 27

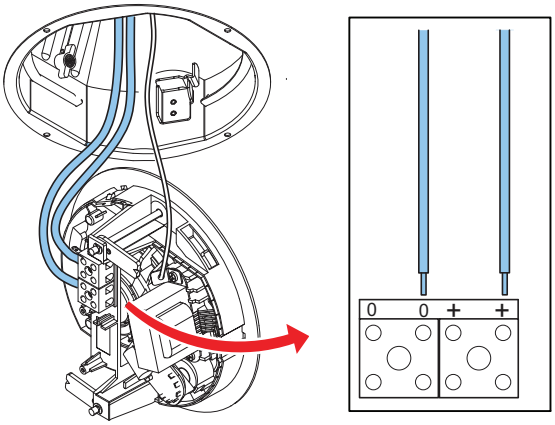

Fig. 28

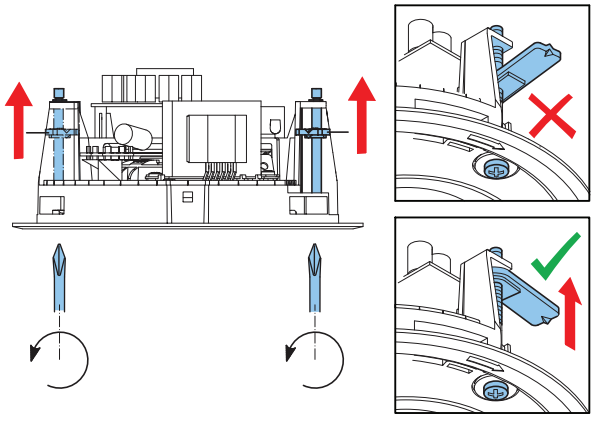

Fig. 29

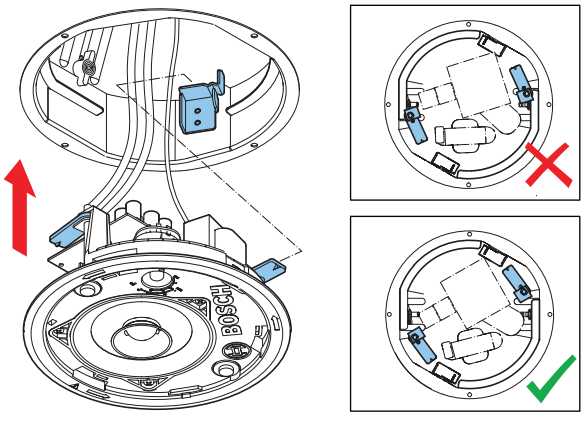

Fig. 30

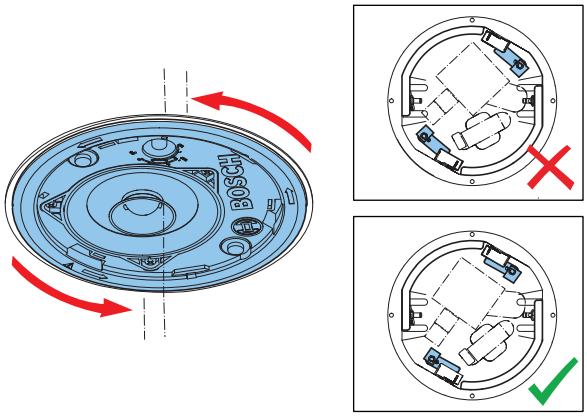

Fig. 31

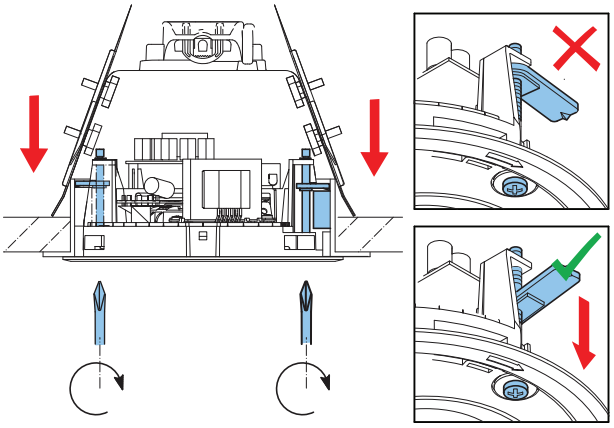

Fig. 32

Next steps: fig. 9-12

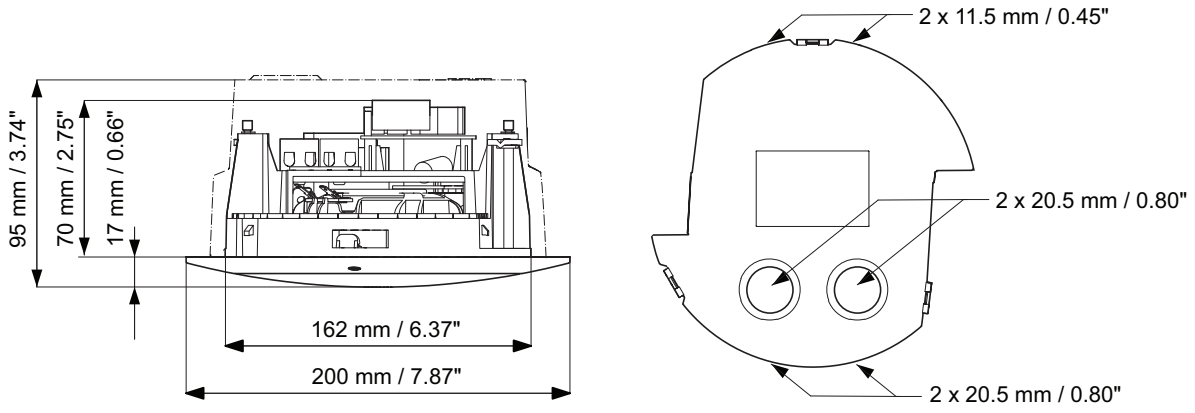

Dimensions

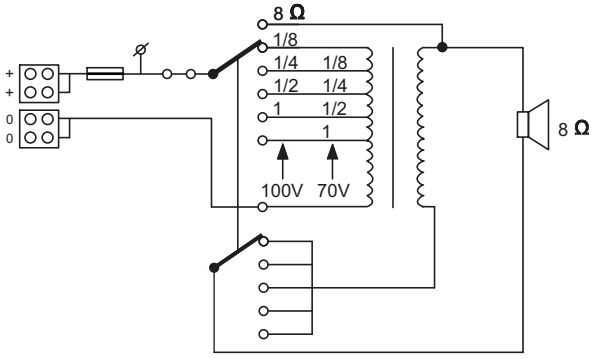

Circuit diagram

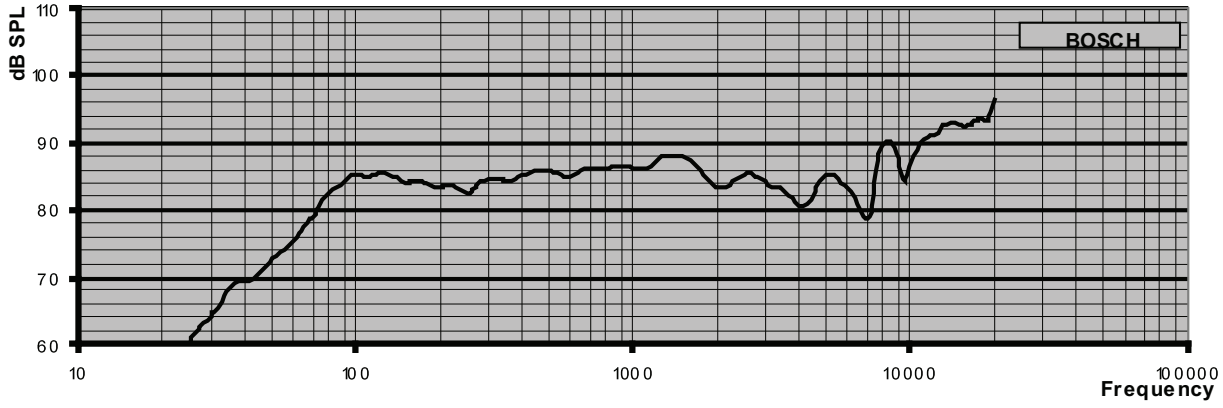

Frequency response

2 Technical specifications

Electrical *

	LC4-UC06E	LC4-UC12E
Description	Ceiling loudspeaker	
Maximum power	9 W	18 W
Rated power	6 W (6/3/1.5/0.75W)	12 W (12/6/3/1.5W)
Sound pressure level at 6 W power / 1 W (1 kHz, 1 m)	95 dB / 87 dB (SPL)	98 dB / 87 dB (SPL)
Opening angle at 1 kHz / 4kHz (-6 dB)	180° / 180°	180° / 180°
Effective frequency range (-10 dB)	65 Hz to 20 kHz	65 Hz to 20 kHz
Rated voltage	6.93 / 70 / 100 V	9.8 / 70 / 100 V
Rated impedance	8 / 835 / 1667 Ohm	8 / 418 / 833 Ohm
Electrical connection	4-way screw terminal block	

	LC4-UC24E
Description	Ceiling loudspeaker
Maximum power	36 W
Rated power	24 W (24/12/6/3 W)
Sound pressure level at 6 W power / 1 W (1 kHz, 1 m)	101 dB / 87 dB (SPL)
Opening angle at 1 kHz / 4kHz (-6 dB)	180° / 180°
Effective frequency range (-10 dB)	65 Hz to 20 kHz
Rated voltage	13.9 / 70 / 100 V
Rated impedance	8 / 208 / 417 Ohm
Electrical connection	4-way screw terminal block

* Technical performance according to IEC 60268-5

Mechanical

	LC4-UC06E	LC4-UC12E	LC4-UC24E
Description	Ceiling Loudspeaker		
Diameter	200 mm (7.87 in)		
Mounting cut-out	162 mm (6.38 in)		
Min./Max. ceiling thickness	5 to 50 mm (0.19 to 1.97 in)		
Maximum depth	70 mm (2.75 in)		
Material (Loudspeaker unit)	ABS (V 0)		
Material (front grille)	Steel mesh with ABS (V 0) rim		
Weight	800 g (1.77 lb)	840 g (1.86 lb)	990 g (2.18 lb)
Color (loudspeaker unit)	Black (RAL 9011)		
Color (front grille)	White (RAL 9003)		

	LC4-CBB	LC4-MFD
Description	Back-Box	Metal Fire-dome
Diameter	160 mm (6.29 in)	197 / 175 mm (7.75 / 6.88 in)
Maximum depth	78 mm (3.07 in)	156 mm (6.14 in)
Mounting cut-out	n.a.	178 mm (7.00 in)
Min./Max. ceiling thickness	n.a.	5 to 50 mm (0.19 to 1.97 in)
Material	ABS (V 0)	Steel
Weight	160 g (0.35 lb)	998 g (2.20 lb)
Color	Black (RAL 9011)	Flame red (RAL 3000)

Environmental

Operating temperature	-25 ºC to +55 ºC (-13 ºF to +131 ºF)
Storage temperature	-40 ºC to +70 ºC (-40 ºF to +158 ºF)
Relative humidity	<95%

Certification and Approvals

Safety	according to EN 60065
Water and dust protected*	according to EN 60529 IP 21
Emergency*	according to BS 5839 part 8, EN 54-24
* With LC4-CBB Back-box or LC4-MFD Fire-dome	

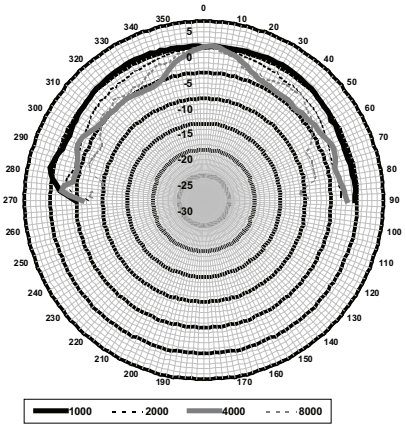

Horizontal/Vertical polar diagram.
Normalized at 0-degrees axis.

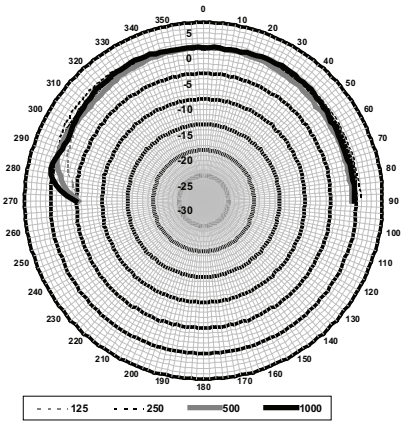

Horizontal/Vertical polar diagram.
Normalized at 0-degrees axis.

CE

Bosch Security Systems BV
Torenallee 49, 5617BA Eindhoven, The Netherlands
10
1438-CPD-0321

EN 54-24:2008

Loudspeaker for voice alarm systems
for fire detection and fire alarm systems for buildings

Ceiling loudspeaker 6 W, 12 W, 24 W and accessories
LC4-UC06E, LC4-UC12E, LC4-UC24E, LC4-CBB, LC4-MFD
Type A

Bosch Security Systems B.V.
Torenallee 49
5617 BA Eindhoven
The Netherlands
www.boschsecurity.com
© Bosch Security Systems B.V., 2013