Middle Atlantic Products

EXCEPTIONAL SUPPORT & PROTECTION™

QBP Series Quiet Blower Panel

EIA/TIA Compliant

The QBP-2 is quieter, yet puts out more CFM than other 1 space fan panels

Features

- Quiet operation, 32 db
- Fan speeds proportional to temperature of enclosure to extend fan life, reduce dust and maintenance
- Proprietary blowers provide high static pressure to maintain airflow even in crowded racks.
- For smaller rack systems and credenzas where space is at a premium and quiet operation is a must
- Compact design occupies only 1 rackspace
- 1/2 rack model also available

QBP-2A

QBP-2A
(inverted position to draw air from the top)

HR-QBP-1
(1/2 rack model)

Architects' and Engineers' Specifications

QBP Series

EIA compliant 19" Quiet Blower Panel shall be Middle Atlantic Products model # (I)QBP-2_ (suffix 'A' for Black Brushed and Anodized finish). Quiet Blower panel shall be finished in a durable black powder coat (QBP-2) or black brushed and anodized (QBP-2A) and shall occupy 1 rackspace. QBP Series Blower panel shall activate at 87°F (30.5°C), reach full speed at 95°F (35°C) and switch off at 85°F (29.4°C). Quiet Blower panel shall displace 100 CFM with a maximum decibel level of 31 dB (measurements made 1 meter from source, centered horizontally and vertically). QBP shall meet applicable requirements under the Low Voltage Directive 2006/95/EC and EMC Directive 2004/108/EC. Quiet Blower panel shall be manufactured by an ISO 9001 and ISO 14001 registered company. Quiet Blower panel shall be warrantied to be free from defects in materials and workmanship under normal use and conditions for a period of 3 years. Quiet Blower panel shall include a UL Listed 12V DC power supply and temperature probe with a 9' cord.

HR-QBP-1

10.4" Half Rack Quiet Blower Panel shall be Middle Atlantic Products model # (I)HR-QBP-1. Half Rack Quiet Blower panel shall be finished in a durable black powder coat and shall occupy 1 rackspace. Half Rack Quiet Blower panel shall activate at 87°F (30.5°C), reach full speed at 95°F (35°C) and switch off at 85°F (29.4°C Half Rack Quiet Blower panel shall displace 50 CFM with a maximum decibel level of 28 dB (measurements made 1 meter from source, centered horizontally and vertically). Half Rack Quiet Blower shall meet applicable requirements under the Low Voltage Directive 2006/95/EC and EMC Directive 2004/108/EC. Half Rack Quiet Blower panel shall be manufactured by an ISO 9001 and ISO 14001 registered company. Half Rack Quiet Blower panel shall be warrantied to be free from defects in materials and workmanship under normal use and conditions for a period of 3 years. Half Rack Quiet Blower panel shall include a UL Listed 12V DC power supply and temperature probe with a 9' cord.

96-01163 / rev 1b / 5-24-12 / QBP Series Quiet Blower Panel

US: New Jersey • California • Illinois • Voice: 973-839-1011 Fax: 973-839-1976 • middleatlantic.com
Canada: Ontario • British Columbia • Voice: 613-836-2501 Fax: 613-836-2690 • middleatlantic.ca

QBP-2 basic dimensions

All dimensions in inches unless otherwise noted [All dimensions in brackets are in millimeters]

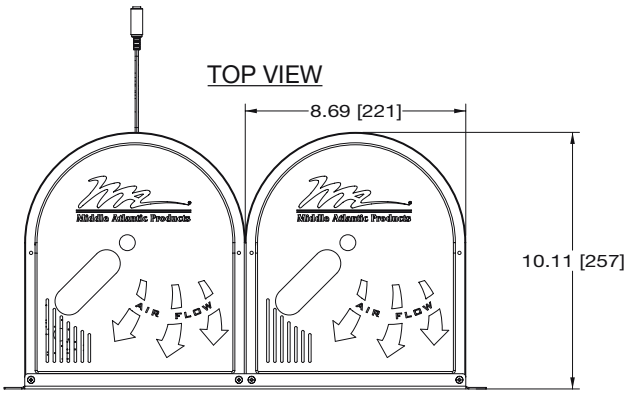

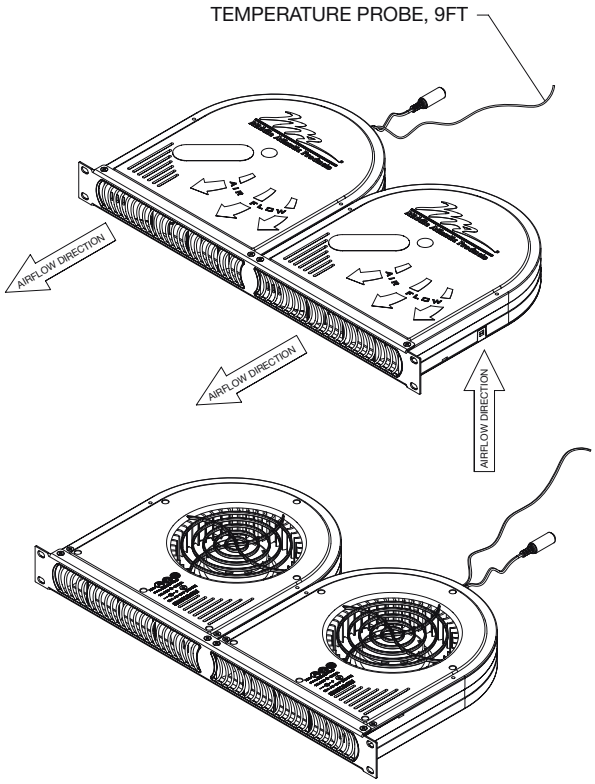

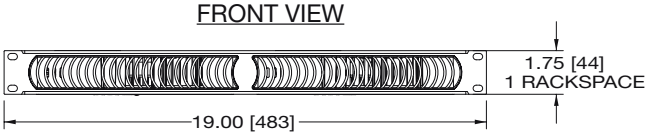

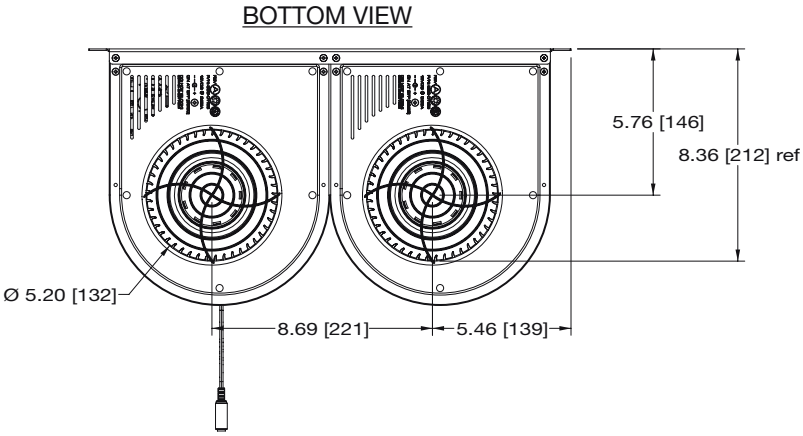

NOTE(S):

1. FAN SPECIFICATIONS:
   AIRFLOW: 100 CFM [2.8 M^3/MIN]
   CURRENT DRAW: 840mA @ 12 VDC
   SOUND LEVEL: 32 dBA @ 1 M
   STATIC PRESSURE: 0.31 IN H_20 [77.22 Pa]

2. QBP-2A SHOWN. ANODIZED VERSION CONTAINS “A” SUFFIX. INTERNATIONAL MODELS, IQBP-2 AND IQBP-2A, COME WITH UNIVERSAL VOLTAGE PLUG-IN POWER SUPPLY AND ADAPTERS.

QBP-1 basic dimensions

All dimensions in inches unless otherwise noted [All dimensions in brackets are in millimeters]

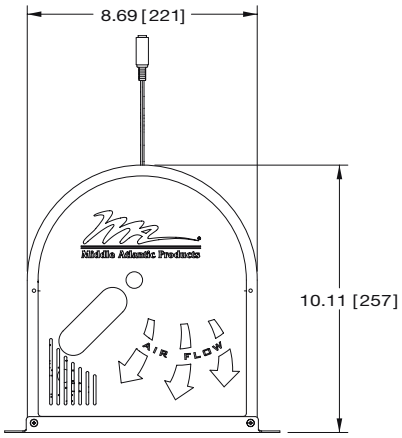

TOP VIEW

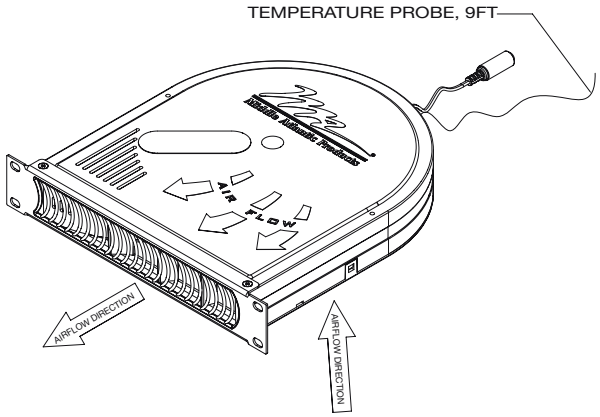

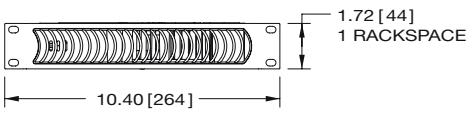

FRONT VIEW

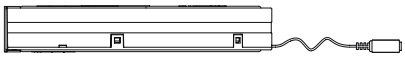

SIDE VIEW

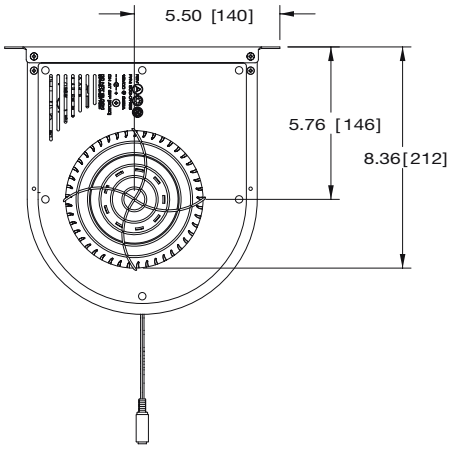

BOTTOM VIEW

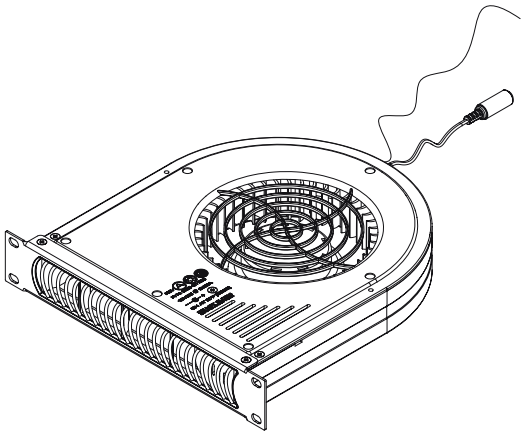

NOTE(S):
FAN SPECIFICATIONS:
AIRFLOW: 50 CFM [1.4 M3/MIN]
CURRENT DRAW: 420mA @ 12 VDC
SOUND LEVEL: 28 dBA @ 1 M
STATIC PRESSURE: 0.31 IN H20 [77.22 Pa]