Closet Splice Housings (CSH)

A LANscape®
Solutions Product

features and benefits |

Universal cable clamp	Cable strain-relief
Open-side design	Easy fiber egress
Projection or flush mountable	Various installation options
Multiple grommeted cable entry ports	Installation options and protection

Corning Cable Systems Closet Splice Housing (CSH) provides storage and protection of fiber splices in individually accessible trays. The housings are used in equipment racks or equipment cabinets, 19-in (48 cm) or 23-in (58 cm), and in the transition splice between outdoor-rated and riser/plenum-rated cable at a building entrance. Pigtail splicing is accomplished when the CSH is used in conjunction with a rack-mount housing. The CSH is available in 3-rack-space tall and 5-rack-space models.

The closet jumper storage and splice housing (CJH) mounts to the back of the closet jumper management panel (CJP) and is used to provide splice capabilities without taking up additional rack space. A sliding shelf provides access to splice trays and routing guides.

The housings have top and bottom rear removable access panels for vertical pigtail entry from the CLSSC-03U or CLSSC-04U housings and lockable front and rear doors (with the optional lock kits).

Closet Splice Housings (CSH-05U and CSH-03U)
| Photo CPC72

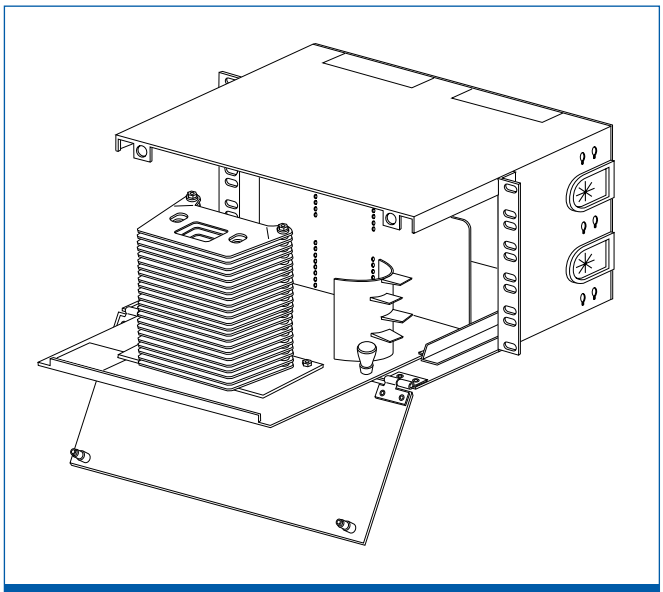

CSH-05U | Drawing CPC-220/5/46

CORNING | LANscape® Solutions

Closet Splice Housings (CSH)

A LANscape®
Solutions Product

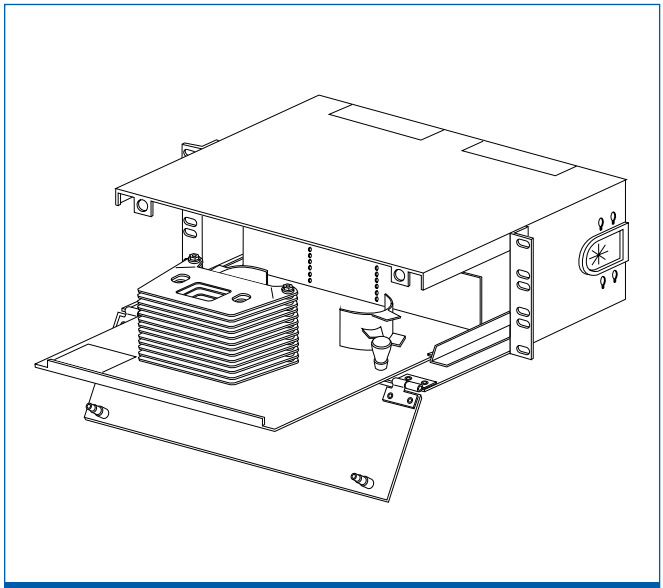

CSH-03U | Drawing CPC-220/5/45

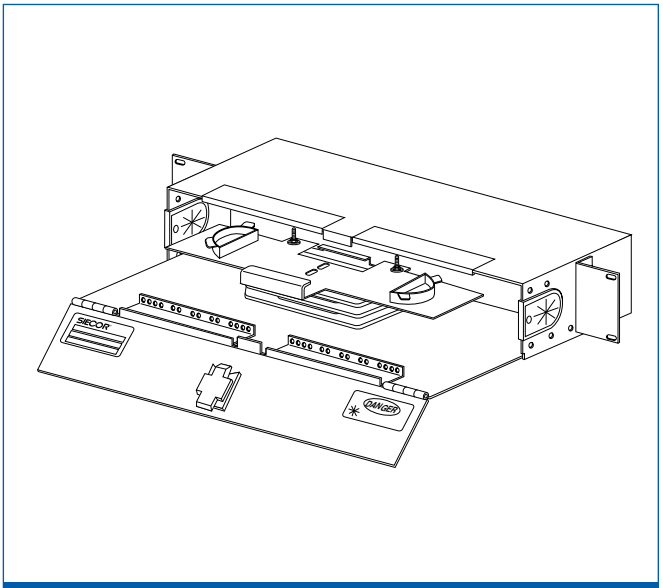

CJH-02U | Drawing ZA-1499

Note: One "U" = One industry-standard rack space of 1.75 in.

specifications |

	Dimensions (H x W x D) cm (in)	Shipping Weight kg (lb)
CSH-03U	13.3 x 43.2 x 30.5 (5.25 x 17 x 12)	2.7 (6)
CSH-05U	22.2 x 43.2 x 30.5 (8.75 x 17 x 12)	3.6 (8)
CJH-02U	8.9 x 43.2 x 17.7 (3.5 x 17 x 7)	1.8 (4)
CJH-03U	13.3 x 43.2 x 17.7 (5.25 x 17 x 7)	2.3 (5)

CORNING | LANscape® Solutions

Closet Splice Housings (CSH)

A LANscape® Solutions Product

ordering information |

Part Number	Description
CSH-03U	Closet Splice Housing; accepts up to (12) 0.2-in Type 2R, 2S or 2M splice trays in 3 rack spaces (5.25-in)*, LANscape® Solutions black color
CSH-03U-F	Closet Splice Housing; accepts up to (7) 0.4-in Type 4R, 4S or 4A splice trays in 3 rack spaces (5.25-in)*, LANscape Solutions black color
CSH-05U	Closet Splice Housing; accepts up to (22) 0.2-in Type 2R, 2S or 2M splice trays in 5 rack spaces (8.75-in)*, LANscape Solutions black color
CSH-05U-F	Closet Splice Housing; accepts up to (14) 0.4-in Type 4R, 4S or 4A splice trays in 5 rack spaces (8.75-in)*, LANscape Solutions black color
CSH-03U-P	Closet Splice Housing; accepts up to (12) 0.2-in Type 2R, 2S or 2M splice trays in 3 rack spaces (5.25-in)*; gunmetal gray color
CSH-03U-F-P	Closet Splice Housing; accepts up to (7) 0.4-in Type 4R, 4S or 4A splice trays in 3 rack spaces (5.25-in)*; gunmetal gray color
CSH-05U-P	Closet Splice Housing; accepts up to (22) 0.2-in Type 2R, 2S or 2M splice trays in 5 rack spaces (8.75-in)*; gunmetal gray color
CSH-05U-F-P	Closet Splice Housing; accepts up to (14) 0.4-in Type 4R, 4S or 4A splice trays in 5 rack spaces (8.75-in)*; gunmetal gray color
CJH-02U	Rear-Mounted Closet Splice Housing designed to utilize the open space behind the 2U jumper management panel (CJP-02U)*; accepts up to (4) 0.2-in Type 2R, 2S or 2M splice trays in 2 rack spaces (3.5-in)
CJH-02U-F	Rear-Mounted Closet Splice Housing designed to utilize the open space behind the 2U jumper management panel (CJP-02U)*; accepts up to (3) 0.4-in Type 4R, 4S or 4A splice trays in 2 rack spaces (3.5-in)
CJH-03U	Rear-Mounted Closet Splice Housing designed to utilize the open space behind the 3U jumper management panel (CJP-03U)*; accepts up to (8) 0.2-in Type 2R, 2S or 2M splice trays in 3 rack spaces (5.25-in)
CJH-03U-F	Rear-Mounted Closet Splice Housing designed to utilize open space behind the 3U jumper management panel (CJP-03U)*; accepts up to (6) 0.4-in Type 4R, 4S or 4A splice trays in 3 rack spaces (5.25-in).
CDF-03U-23-BKT	Brackets for mounting the CSH-03U or CSH-03U-F on a 23-in rack
CDF-05U-23-BKT	Brackets for mounting the CSH-05U or CSH-05U-F on a 23-in rack

**Splice trays and jumper management panels (CJPs) ordered separately.*

notes |

Corning Cable Systems LLC • PO Box 489 • Hickory, NC 28603-0489 USA
800-743-2675 • FAX: 828-325-5060 • International: +1-828-901-5000 • www.corning.com/cablesystems

Corning Cable Systems reserves the right to improve, enhance and modify the features and specifications of Corning Cable Systems products without prior notification. LANscape is a registered trademark of Corning Cable Systems Brands, Inc. All other trademarks are the properties of their respective owners. Corning Cable Systems is ISO 9001 certified.
© 1999, 2012 Corning Cable Systems. All rights reserved. Published in the USA. LAN-402-EN / February 2012