Alternative Mounting Option for Pretium EDGE™ Solutions Hardware

A LANscape® Pretium® Solutions Product

When cabinet space within the data center is limited, Corning Cable Systems offers a range of mounting options to enable installation of Pretium EDGE™ Solutions housings into overhead spaces. Brackets are available which allow mounting to existing overhead structures such as wire tray and ladder rack, and are available in both 2- and 4-rack-unit sizes. The 4-rack-unit brackets accommodate the Pretium EDGE Solutions 4U housing or up to four 1U housings, while the 2-rack-unit brackets accommodate up to two 1U housings. The low-profile brackets can be installed simply with only a screwdriver. Overhead installations allow complete racks or cabinets to be removed or relocated during upgrades or moves, adds and changes, and the fiber infrastructure doesn't occupy critical and expensive rack space.

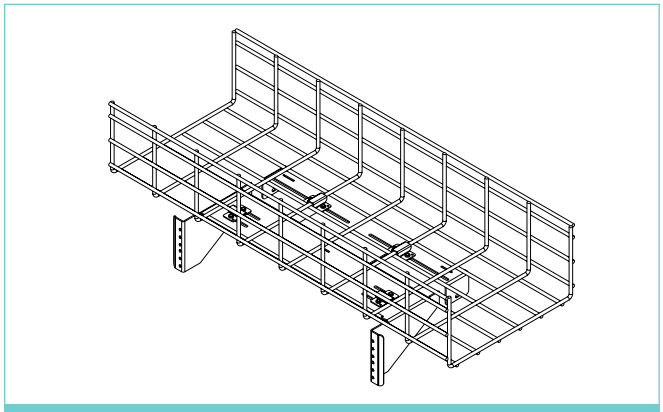

Drawing ZA-3731 (shown empty)

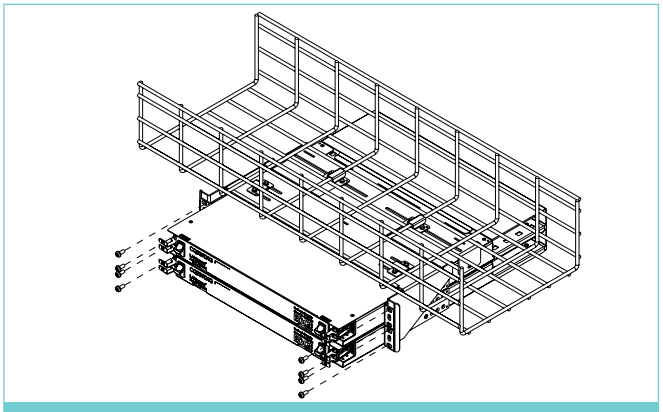

Drawing ZA-3737 (shown with two EDGE-01U housings)

EDGE-BKT-WT-2RU

Wire tray bracket allowing for up to two EDGE-01U housings to be installed.

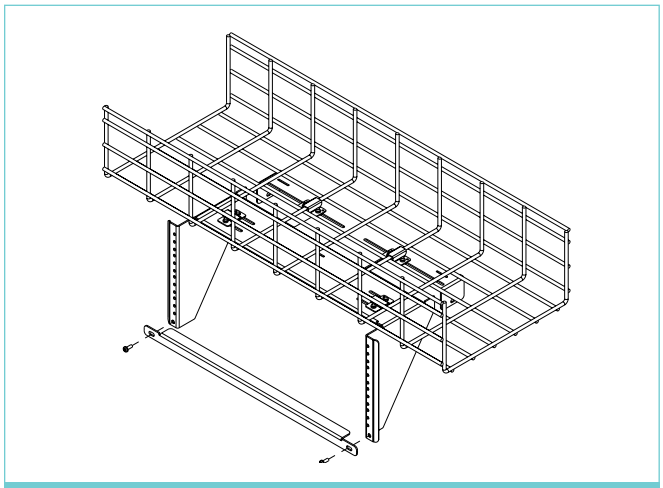

Drawing ZA-3732 (shown empty)

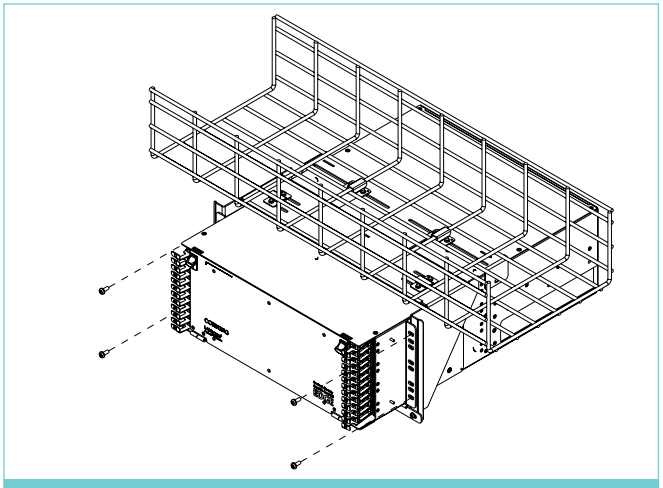

Drawing ZA-3733 (shown with EDGE-04U housing)

EDGE-BKT-WT-4RU

Wire tray bracket allowing for one EDGE-04U or up to four EDGE-01U housings to be installed.

CORNING | LANscape® Pretium® Solutions

Alternative Mounting Option for Pretium EDGE™ Solutions Hardware

A LANscape® Pretium® Solutions Product

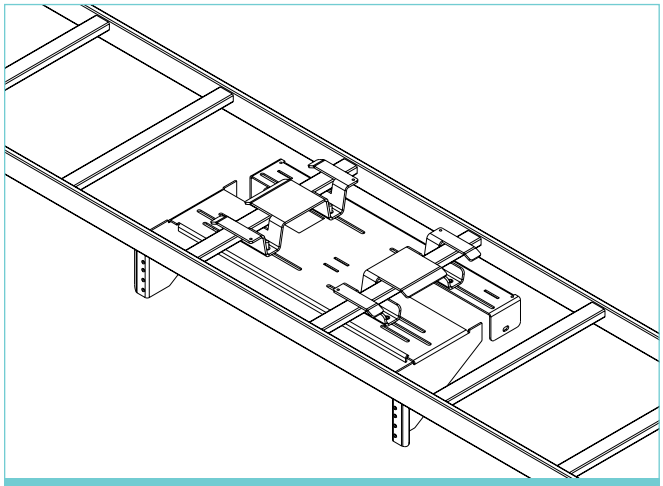

Drawing ZA-3735 (shown empty)

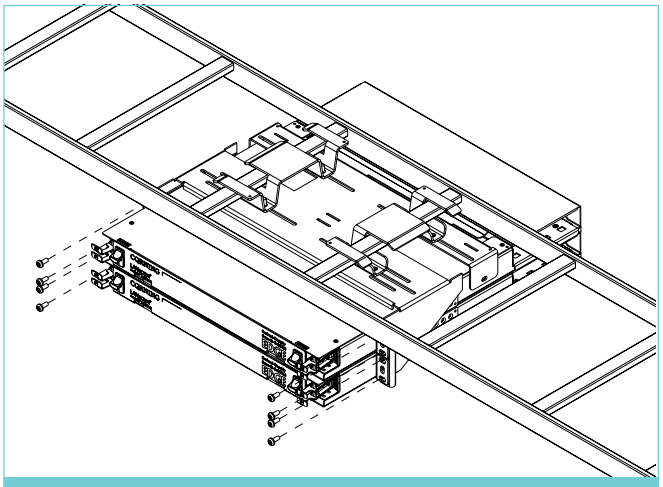

Drawing ZA-3734 (shown with two EDGE-01U housings)

EDGE-BKT-LR-2RU

Ladder rack bracket allowing for up to two EDGE-01U housings to be installed.

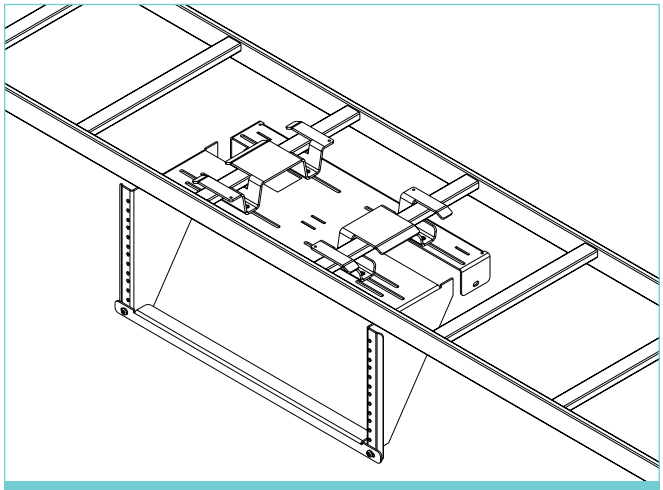

Drawing ZA-3736 (shown empty)

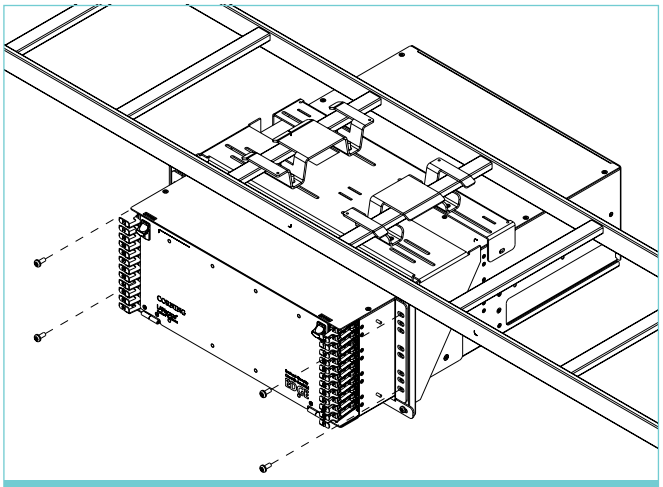

Drawing ZA-3738 (shown with EDGE-04U housing)

EDGE-BKT-LR-4RU

Ladder rack bracket allowing for one EDGE-04U or up to four EDGE-01U housings to be installed.

Corning Cable Systems LLC • PO Box 489 • Hickory, NC 28603-0489 USA
800-743-2675 • FAX: 828-325-5060 • International: +1-828-901-5000 • www.corning.com/cablesystems

Corning Cable Systems reserves the right to improve, enhance and modify the features and specifications of Corning Cable Systems products without prior notification. LANscape and Pretium are registered trademarks of Corning Cable Systems Brands, Inc. Pretium EDGE is a trademark of Corning Cable Systems Brands, Inc. All other trademarks are the properties of their respective owners. Corning Cable Systems is ISO 9001 certified. © 2010 Corning Cable Systems. All rights reserved. Published in the USA. LAN-1281-EN / September 2010

CORNING | LANscape® Pretium® Solutions