# Sheath Removal of Non-armored ALTOS® Fiber Optic Cables

## 1. General

**1.1** This procedure describes a general sheath removal method for non-armored ALTOS® cables.

**1.2** Corning Cable Systems ALTOS cable is a rugged fiber optic cable featuring buffer tubes and a dielectric central member protected by waterblocking tape and yarn (Figure 1).

**NOTE:** *Steps that reference dielectric strength yarns are only required for cable designs incorporating these yarns.*

**1.3** This issue include a new precaution about filler rods.

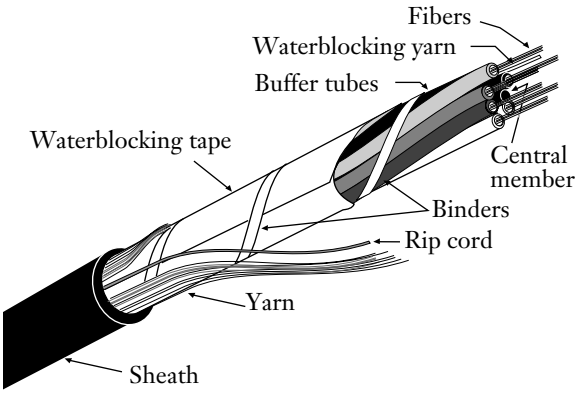

Figure 1

## 2. Precautions

### 2.1 General Precautions

**CAUTION:** *The wearing of* ***safety gloves*** *to protect your hands from accidental injury when using sharp-bladed tools is strongly recommended. Use extreme care when the utility knife's blade is exposed. Dispose of used blades properly.*

**WARNING:** *The wearing of* ***safety glasses*** *to protect the eyes from accidental injury is strongly recommended when cutting central members and fiber.*

### 2.2 Chemical Precautions

**Fiber-Clean Wipes**

**WARNING:** *Contains hydrocarbons. Apply in rooms having normal room ventilation. For prolonged and/or repeated use, gloves are recommended. Avoid eye contact. Keep away from open flames and ignition sources.*

*If ingested, do not induce vomiting. Consult a physician. If contact with eyes, wash eyes with water for 15 minutes.*

### 2.3 Cable Handling Precautions

**CAUTION:** *Fiber optic cable is sensitive to excessive pulling, bending and crushing forces. Consult the cable specification sheet for the cable you are installing. Do not bend cable more sharply than the minimum recommended bend radius. Do not apply more pulling force to the cable than specified. Do not crush the cable or allow it to kink. Doing so may cause damage that can alter the transmission characteristics of the cable- the cable may have to be replaced.*

### 2.4 Filler Rod Precautions

**CAUTION:** *Filler rod color may vary from cable to cable. Typical filler rod colors are natural (off-white) and black. Careful attention should be taken to avoid accidental cutting of live buffer tubes; particularly white and black tubes. In mid-span applications, CCS recommends coiling all tubes and filler rods in the slack storage area of the splice closure; especially for cables with fiber counts above 96 fibers. Avoid cutting any filler rods unless necessary for storage space considerations. When in doubt regarding the buffer tube color code and filler rod placement, contact CCS Engineering Services for assistance prior to cutting.*

## 3. Tools and Materials

**3.1** This procedure requires the following basic tools:

- Utility knife with hook blade
- Fiber-Clean® cleaning wipes if filling compound is present
- Scissors
- Diagonal cutting pliers
- Vinyl tape
- Sheath ripper
- Tape measure
- Small screwdriver

All of these items are contained in the Corning cable systems Sheath Removal Tool Kit (TKT-005), or in the Fusion Splicing Tool Kit (M67-003).

## 4. Cable Preparation

**4.1** Refer to the documentation for the hardware in which you are installing the cable for the required sheath removal lengths.

**4.2** Mark the cable at the appropriate distance from the cable end with a wrap of tape (Figure 2).

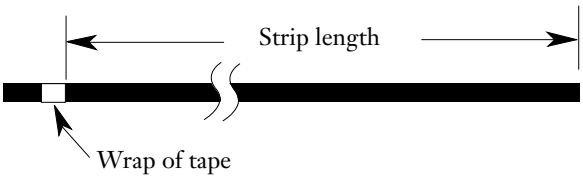


Figure 2

## 5. Sheath Removal

**Note:** *Before proceeding with the following steps, anchor the cable securely to the work area using tape or cable ties; otherwise, two craftspersons will be required.*

**5.1** Use the hook blade to carefully make a ring cut 15 cm (6 in) from the end of the sheath (Figure 3) – *Use care to avoid damaging the buffer tubes.*

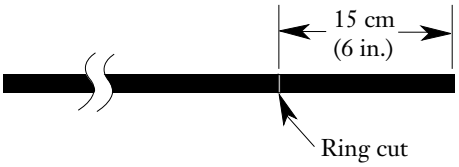


Figure 3

**5.2** Position the blade of the hook blade knife at the ring cut so that it can travel down the cable between the sheath and the cable core towards the cable end.

*Hold the knife at a 45° angle to the cable to prevent the blade from slipping out of the sheath.*

Slit the 15 cm (6 in.) section of cable sheath by holding the arm which has the knife out straight and pulling the cable "through" the hook blade with your other hand (Figure 4).

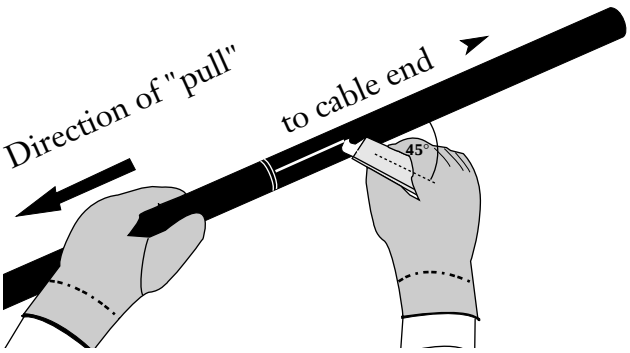


Figure 4

**5.3** Remove the 15 cm (6 in.) section of sheath from the end of the cable – *use care during this step to avoid damaging the buffer tubes* (Figure 5).

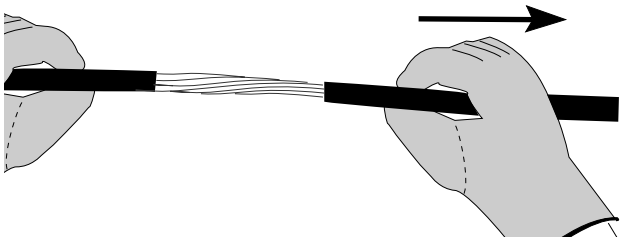

Figure 5

**5.4** Locate and separate the orange rip cord from the yarn surrounding the cable core. Cut a starting notch in the cable sheath as shown in Figure 6.

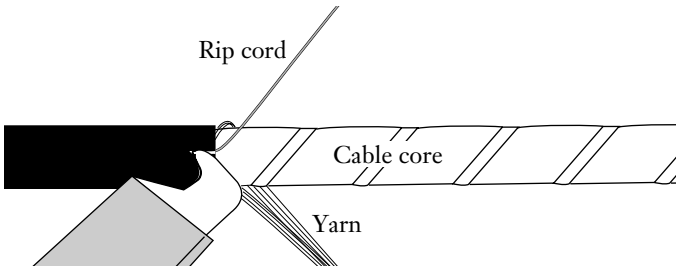


Figure 6

**5.5** Wrap the rip cord around the shaft of a screw-driver, short section of scrap cable, or other object which can serve as a handle.

**5.6** Pull the rip cord through the sheath to the tape wrap (Figure 7). Cut the rip cord flush at the tape wrap.

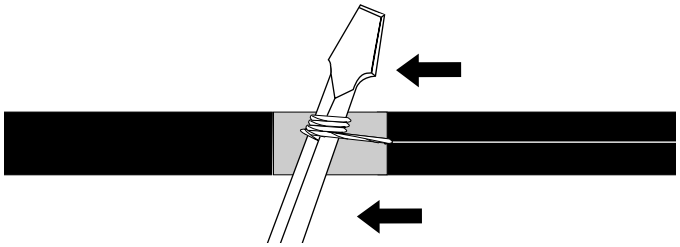

Figure 7

**5.7** Carefully separate the sheath from the yarn-covered cable core back to the tape wrap (Figure 8).

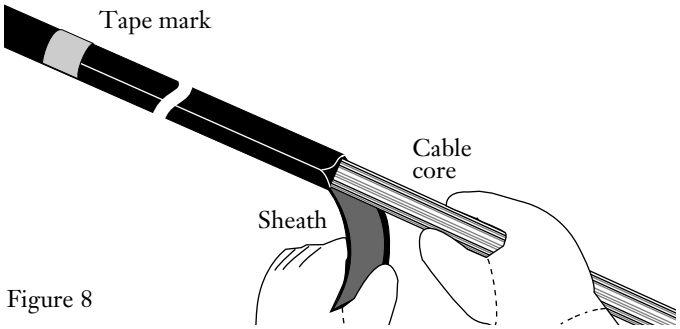


Figure 8

**5.8** Trim off the split section of sheath at the tape mark with side cutters (Figure 9) or scissors.

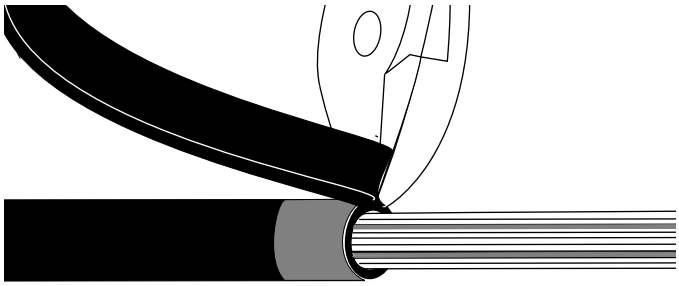

Figure 9

**5.9** Starting near the tape mark, pull the yarn away from the cable core until the core is exposed exposed for a length of 25 cm (10 in.) (Figure 10).

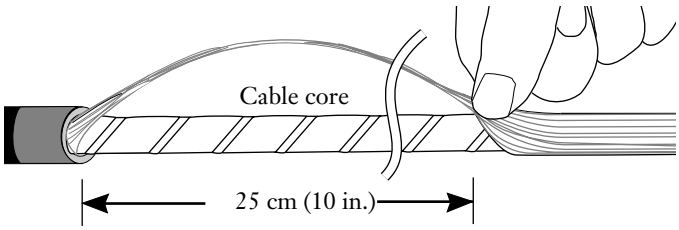


Figure 10

**5.10** Cut the yarn at the 25 cm point with a pair of scissors (Figure 11). Fold the 25 cm length of yarn back out of the way.

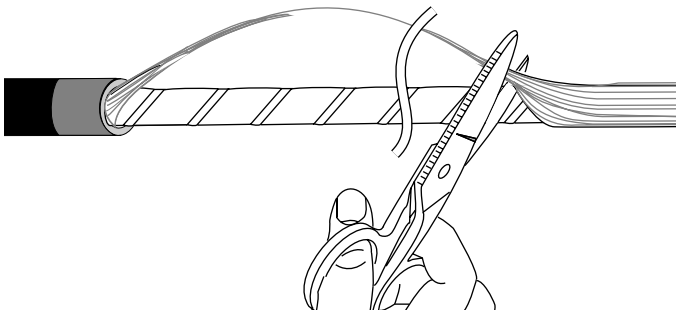

Figure 11

**5.11** Starting at the cut point, slide the yarn off the end of the cable (Figure 12). The yarn will bunch up, but will slide to the end of the cable.

USE CARE TO PREVENT ANY DAMAGE TO THE BUFFER TUBES. ALWAYS SLIDE THE YARN AWAY FROM THE CABLE'S ANCHOR POINT.

Figure 12

**5.12** Use a seam ripper every 5 cm (2 in.) to cut the single binding tape that secures the waterblocking tape to the cable core. USE EXTREME CAUTION to prevent buffer tube damage (Figure 13).

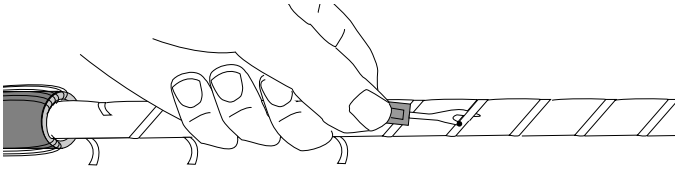

Figure 13

**5.13** Starting at the tape mark, slide the binder tape to the end of the cable core. Slide the tape off the cable.

USE CARE TO PREVENT ANY DAMAGE TO THE BUFFER TUBES.

**5.14** Separate the water blocking tape from the cable core (Figure 14). Use scissors to cut the water-blocking tape flush with the end of the cable sheath.

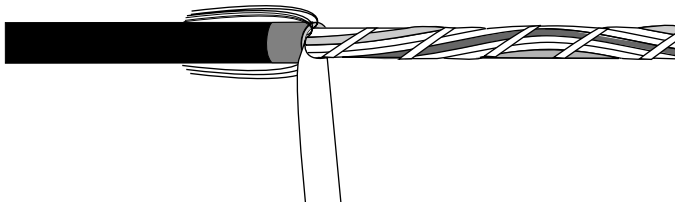

Figure 14

**5.15** Use a seam ripper every 5 cm (2 in. ) to cut the binding tape(s) that secures the buffer tubes to the dielectric central member. USE EXTREME CAUTION to prevent buffer tube damage (Figure 15).

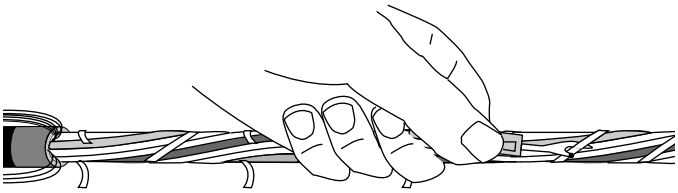

Figure 15

**5.16** Starting at the tape mark, slide the binder tape off the end of the cable. USE CARE TO PREVENT ANY DAMAGE TO THE BUFFER TUBES.

**5.17** Separate the buffer tubes as follows:

a) Working from the end of the cable back to the tape mark, carefully unwind the buffer tubes from around the central member of the cable (Figure 16). Be careful not to bend or kink any of the buffer tubes.

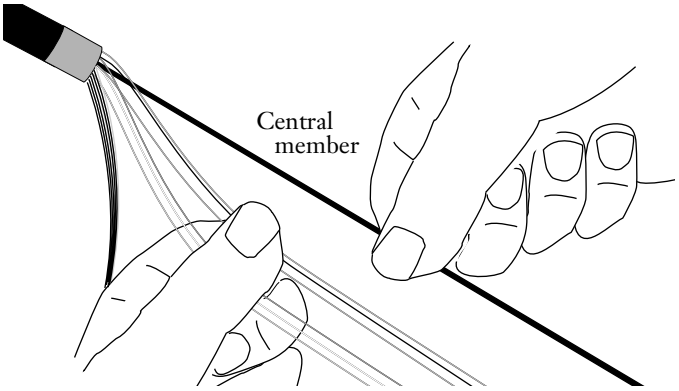


Figure 16

b) Examine each buffer tube for damage.

*If you find any damaged tubes, report the damage to your supervisor. Do not cut out a damaged section or continue the installation with damaged fibers.*

c) Using scissors, cut the water blocking yarn flush with the end of the cable sheath.

b) Examine each buffer tube for damage.

*If you find any damaged tubes, report the damage to your supervisor. Do not cut out a damaged section or continue the installation with damaged fibers.*

c) Using scissors, cut the water blocking yarn flush with the end of the cable sheath.

**Note:** *The central member length called for in this procedure should be adequate for most hardware - most closures will require additional trimming of the central member. Always verify the central member length your installation requires before cutting.*

**CAUTION:** *Use extreme care when cutting or stripping coating from central members to prevent damage to the buffer tubes. WEAR EYE PROTECTION WHENEVER YOU CUT A CENTRAL MEMBER. Hold the portion of the central member which will be cut from the cable to prevent it from causing possible injuries.*

**5.18** Use side cutters to cut the dielectric central member to a length of 15 cm (6 in.) (Figure 17).

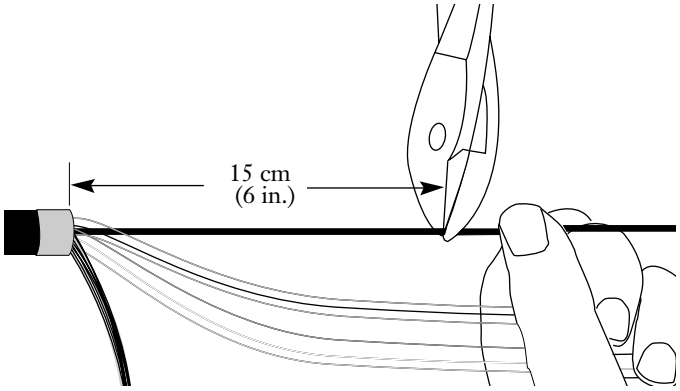


Figure 17

## 6. Accessing the Optical Fibers

**6.1** Use an Ideal coaxial cable stripper to score the buffer tubes. Scoring the circumference of the tube will enable you to make a clean break in the tube with minimal risk to the fibers inside.

Before using the stripper, make sure that it is properly adjusted. Use a small screwdriver to adjust *one* of the blades on the side of the buffer tube cutter so that it seats against the lower jaw but does not force the jaw open (Figure 18).

*Leave the blades on the front and other side of the tool fully retracted so that they do not extend into the grooves of the lower jaw.*

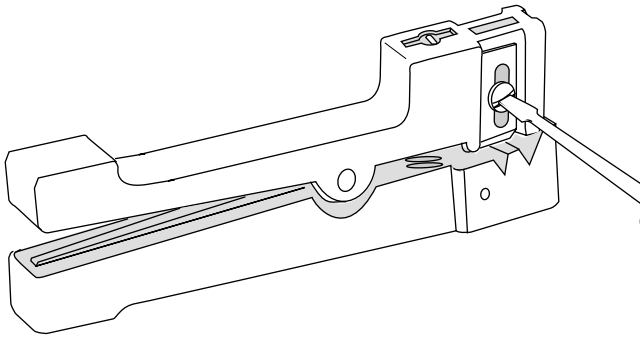

Figure 18

**6.2** Use the last 2 to 3 inches (5 to 7.5 cm) at the end of the cable end to determine the sharpness of the stripper's blade and how many turns of the tool will be required to score the tube.

*To minimize damage to the fibers inside the tube, always use the tool to score the tube,* ***not*** *ring cut it.*

**6.3** To score a buffer tube:

a) Open the tool by squeezing its handles together and place the stripper's blade on the buffer tube at the desired scoring point.

b) Hold the buffer tube steady with one hand to prevent it from twisting.

c) Use your other hand to rotate the tool around the buffer tube two to three complete turns to score it (Figure 19). Remove the tool from the buffer tube.

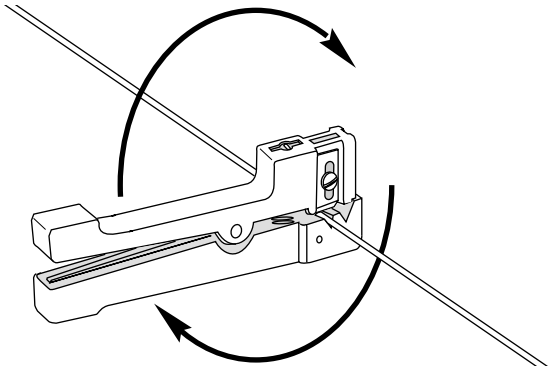

Figure 19

If the stripper completely cuts through the tube during this trial step, move the tool to a new trial area at the end of the buffer tube and repeat a) through c) with fewer rotations in step c). If the blade cuts completely though the tube, damage to the fibers inside can result.

d) Carefully flex the tube to break it at the score point. The break should be clean and free of rough edges (Figure 20). Carefully slide the severed section of buffer tube off of the fibers.

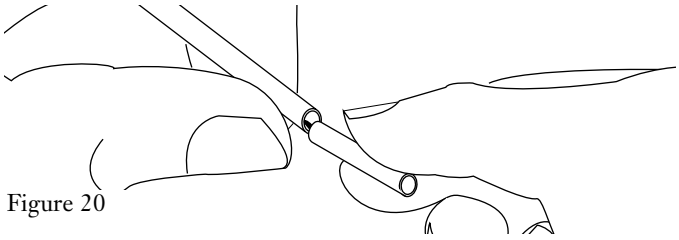

Figure 20

*If the break is not clean, repeat the trial at a new location at the end of the tube with an additional rotation or two.*

**6.4** Once you have determined the number of rotations needed to score the tube, place the tool at the actual score point and carefully repeat steps 6.3 a) through d).

**6.5** If the buffer tube is Gel-free, carefully cut out the water block yarns if present and proceed to step 7.1. If filling compound is present, use a Fiber-Clean wipe to clean the fibers. Use a dry tissue for final cleaning.

## 7. Hardware Placement

**7.1** Route and secure the cable into the selected termination or splice hardware, following all hardware instructions and procedures. BE EXTREMELY CAREFUL NOT TO DAMAGE THE EXPOSED FIBERS DURING THIS STEP.

**7.2** Terminate or splice the individual fibers according to the appropriate procedures.



Printed in U.S.A.

Corning Cable Systems LLC
PO Box 489
Hickory, NC 28603-0489 USA
For US and Canada 1-800-743-2673
International 828-901-5000
FAX: 828-901-5973
http:www.corning.com/cablesystems