LDC-005 Connector and Splice Module Housing

Revision History

Issue	Date	Reason for Change
10	05/2007	Added RoHS symbol to front page and converted to current format
9	10/2000	Administrative changes - Corning
8	11/1999	Included instructions to stack housings, added safety precautions
7	01/1998	Administrative changes - Siecor
6	12/1996	Illustrated bracket orientation for flush mounting
5	09/1993	Added instructions to secure buffer tubes
4	05/1993	Unknown
3	05/1993	Unknown
2	02/1993	Revised Figure 2
1	04/1992	Initial release

Table of Contents

Admonishments 2
1. General 2
2. Carton Contents 3
3. Tools and Materials Required 4
   3.1 Tools 4
   3.2 Materials 4
4. Installation 4
   4.1 Mount the Housing into a Rack 4
   4.2 Mount the Housing to a Wall 5
   4.3 Secure the Cable 5
      4.3.1 Strain-relieving Using the 12A2 Clamp 5
      4.3.2 Strain-relieving the Cable Central Member 6
5. Managing Cable 7
   5.1 Install Preconnectorized Panels/Modules 7
   5.2 Prepare Cable for Splicing 8
   5.3 Splice the Fibers 8
   5.4 Replace Doors (If They Were Removed) 9
6. Maintenance 10

Admonishments

The precautionary terms used by Corning Cable Systems in its standard recommended procedures conform to the guidelines expressed in the American National Standards Institute document (ANSI Z535) for hazard alert messages. Alerts are included in this instruction based on the following:

DANGER: *indicates an imminently hazardous situation which, if not avoided, will result in death or serious injury.*

WARNING: *indicates a potentially hazardous situation which, if not avoided, could result in death or serious injury.*

CAUTION: *indicates a hazardous situation which, if not avoided, may result in minor or moderate injury.*

1. GENERAL

This document describes the recommended procedure for installing the LDC-005 Connector and Splice Module Housing. The LDC-005 unit accepts one Lucent™ LTIA-type splice tray (purchased separately). The unit can be used with existing Lucent LGX® components already in place. The unit is compatible with Lucent's LSC1U-024/5 housing.

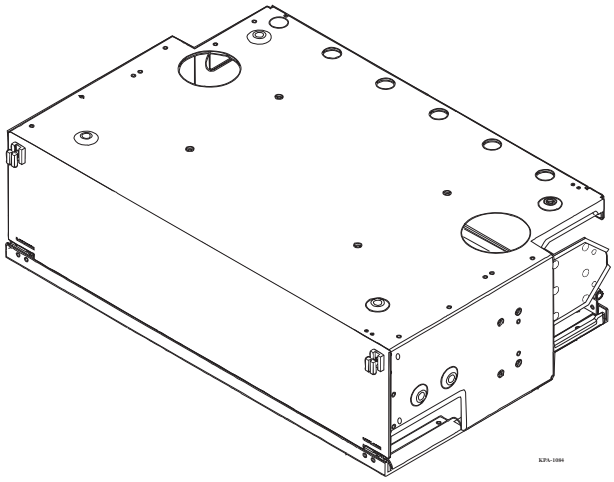

Figure 1 — LDC-005

The housing holds four connector panels or modules (purchased separately). The housings can be stacked to increase fiber capacity. Attach the housings together using the provided nuts, washers, and screws (four each).

The unit can be wall-mounted or installed into an equipment rack. Express ports at the top and bottom of the unit allow fibers to be routed from one housing to another after the unit is rack-mounted.

Contact your customer service representative to purchase accessories that are sold separately.

Read and understand this procedure (as well as instructions provided with related assemblies) before beginning an installation. Familiarize yourself with the unit's placement in your network. Make sure you know where the cable will enter the unit, where it will be placed in the equipment rack, how jumpers will be routed, and other details of your installation plan.

2. CARTON CONTENTS

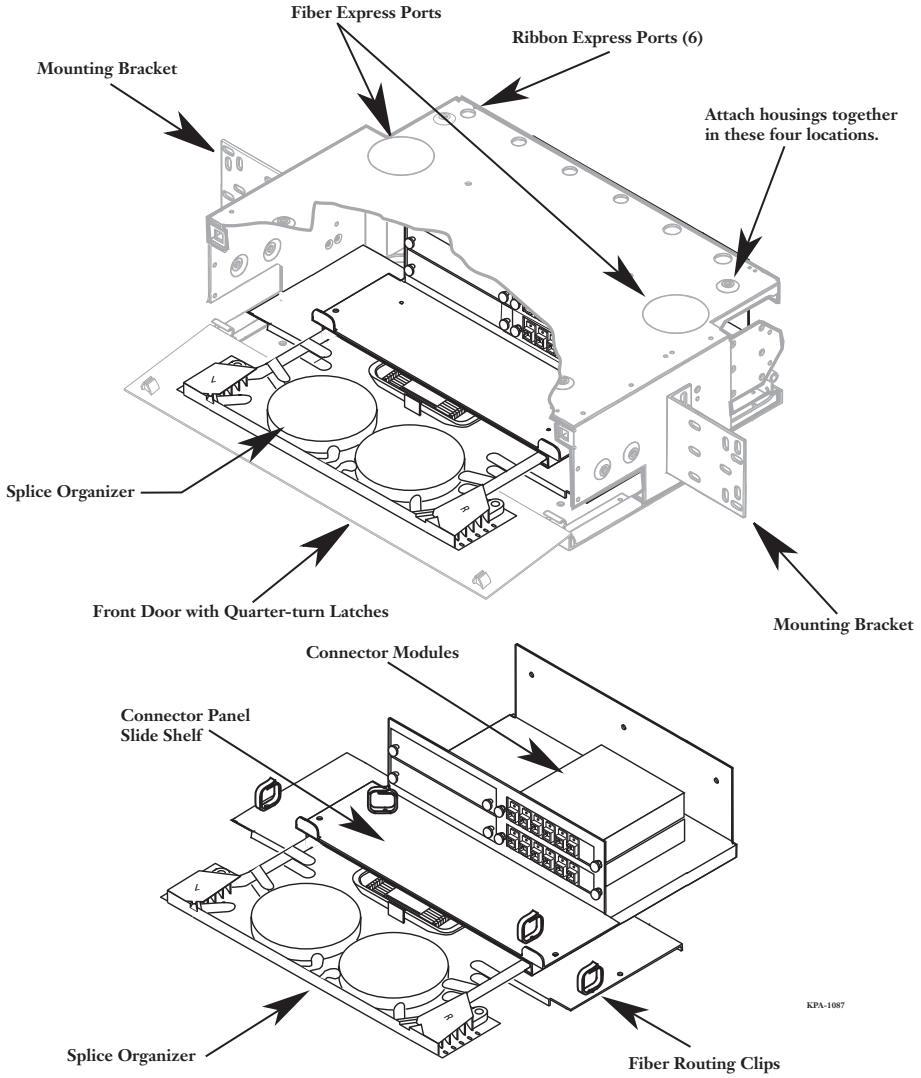

Figure 2 — LDC-005 Components

- (1) Splice Module Housing
- (2) Mounting brackets
- (2) 10-32x0.375 Phillips-head screws
- (2) 10-32x0.5 Phillips-head screws
- (4) 12-24x0.5 pan-head screws
- (10) #10 Flat washers
- (17) 0.75-inch Circular routing clips
- (1) Label sheet, 1-72
- (2) Tie wraps, 8-inch
- (1) Cable clamp bracket
- (1) 12A2 Strain-relief kit
- (2) Self-sticking cable clamps

3. TOOLS AND MATERIALS REQUIRED

3.1 Tools

- Phillips-head screwdriver
- Flat-tipped screwdriver
- 5/32-inch socket or wrench
- 7/16-inch wrench
- Needle-nosed pliers
- Cable stripping tools

3.2 Materials

Wall-mounting hardware (not included)

The type of hardware used is dependent upon the mounting location; wall anchors may be required for adequate support on sheetrock walls. Mount directly to wall studs when possible.

4. INSTALLATION

4.1 Mount the Housing into a Rack

IMPORTANT: *Remove the express port plugs from the bottom and top of the housing before mounting the housing into the rack.*

Attach the brackets to the housing using the provided 10-32x0.5-inch screws. Attach the unit to the equipment rack using the four screws provided (Figure 3) (two screws per side).

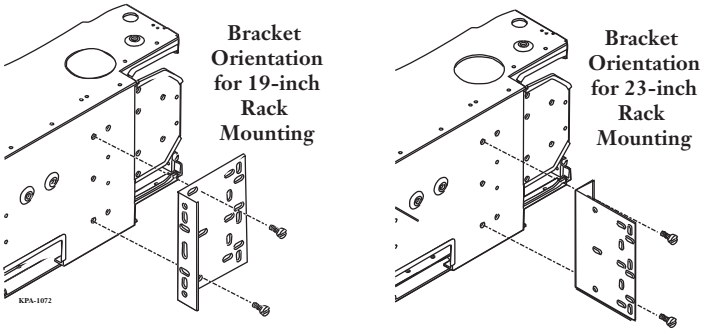

Figure 3 — Bracket Orientation for Rack Mounting

The mounting bracket position may be changed to adjust the frontal projection from the rack (Figure 4). The unit can also be mounted to the front of the rack uprights.

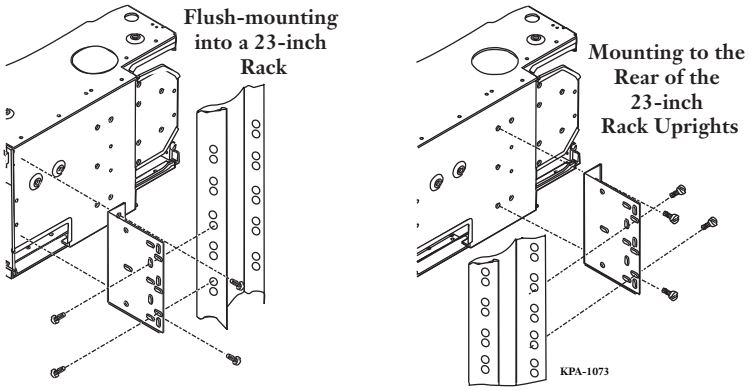

Figure 4 — Bracket Orientations

4.2 Mount the Housing to a Wall

Make sure the rear door is attached. Attach mounting brackets to the housing as shown in Figure 5. Select a flat vertical surface to prevent warping. Make sure the wall will support the weight of the unit; wall anchors may be required in sheetrock walls. Mount the unit to the wall studs when possible. Hardware for securing the unit to the wall is not provided.

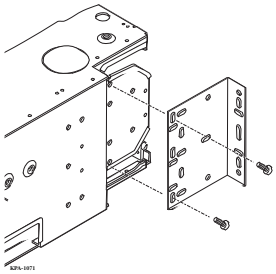

Figure 5 — Bracket Location for Wall Mounting

4.3 Secure the Cable

NOTE: *Fiber optic cable is sensitive to excessive pulling, bending, and crushing forces. Consult the cable specification sheet for the cable you are installing.* ***Do not bend the cable more sharply than the minimum recommended bend radius. Do not apply more pulling force to the cable than specified. Do not crush the cable or allow it to kink.*** *Doing so may cause damage than can alter the transmission characteristics of the cable; the cable may have to be replaced.*

IMPORTANT: *If you are installing outside plant cable or temperature fluctuates widely along any part of the cable, the central member must be strain-relieved. Failure to do so may result in damage to the cable as temperature varies. If the entire length of cable is located in a controlled environment where temperature fluctuation is minimal, it is not necessary to secure the central members. The cable can be strain-relieved by sheath retention alone.*

To strain-relieve the cable, use the 12A2 Clamp or cable ties.

4.3.1 Strain-relieving the Cable Using the 12A2 Clamp

Step 1: Determine the location for cable entry into the housing. Do NOT install the strain-relief bracket yet.

Step 2: Insert the bolt into the bottom half of the clamp (Figure 6).

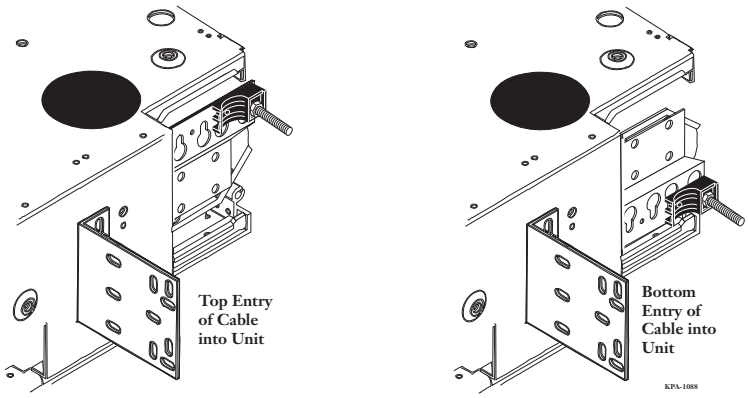

Figure 6 — Mounting Bracket Orientation

Step 3: Position the bottom half of the clamp appropriately. Press the clamp alignment pin on the rear of the clamp into the locator hole in the bracket in the correct orientation (Figure 6).

Step 4: Place the nut onto the bolt and tighten using the 5/32-inch wrench (Figure 7).

Step 5: Attach the strain-relief bracket to the housing.

Step 6: Route the cable to the 12A2 clamp. If necessary, attach the plastic V-groove insert onto the bottom half of the clamp. Press the other plastic V-groove insert onto the top half of the clamp and position it over the cable (Figure 8).

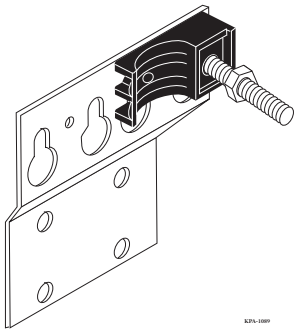

Figure 7 — 12A2 Clamp

Step 7: Secure the clamp using the provided flat washer and nut. Tighten the nut using a 7/16-inch wrench. Do not overtighten.

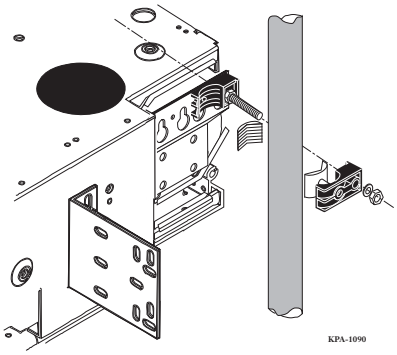

Figure 8 — Install Cable into Clamp

4.3.2 Strain-relieving the Cable Central Member

CAUTION: *Wear safety glasses to protect your eyes from accidental injury when handling chemicals and cutting fiber. Pieces of glass fiber are very sharp and can damage the eye easily.*

CAUTION: *Wear safety gloves to protect hands from accidental injury when using sharp instruments.*

Step 1: Install the U-shaped washer and the flat washer on the supplied Phillips-head machine screw into the side of the housing in the orientation shown. Install the screw into the side of the housing.

Step 2: Loosely install the hex nut.

Step 3: Place the central member and yarn, if present, between the U-shaped washer and the flat washer (Figure 9).

Step 4: Wrap yarn around the screw in a clockwise direction and under the U-shaped washer.

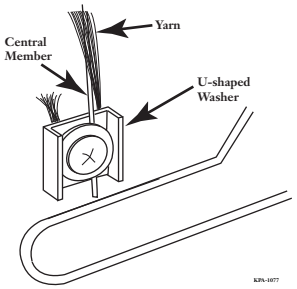

Figure 9 — Central Member Strain-relief

Step 5: Tighten the hex nut.

Step 6: Trim off the excess yarn.

Step 7: Trim the central member to less than or equal to 6.5 cm (2 1/2 inches) from the end of the cable sheath.

5. MANAGING CABLE

WARNING: ***Never look directly into the end of a fiber that may be carrying laser light.*** *Laser light is invisible and can damage your eyes. Viewing it directly does not cause pain. The iris of the eye will not close involuntarily as when viewing a bright light. Consequently, serious damage to the retina of the eye is possible. Should accidental eye exposure to laser light be suspected, arrange for an eye examination immediately.*

WARNING: *DO NOT use magnifiers in the presence of laser radiation. Diffused laser light can cause eye damage if focused with optical instruments. Should accidental eye exposure to laser light be suspected, arrange for an eye examination immediately.*

WARNING: *DO NOT use magnifiers in the presence of laser radiation. Diffused laser light can cause eye damage if focused with optical instruments. Should accidental eye exposure to laser light be suspected, arrange for an eye examination immediately.*

The front and rear doors can be removed to ease fiber installation. Turn the latch one-quarter turn and slide the doors to the side and off the hinges.

5.1 Install Preconnectorized Panels/Modules

Step 1: Pull out on the plastic plunger fasteners and remove blank panels from the unit.

Step 2: Label the end of the pigtail fiber with an identification tag that corresponds to the panel's position in the housing (Figure 10). Single-fiber pigtails can be bundled together to simplify routing. If any excess length of the pigtail is removed, place new identification tags on the working length before removing the excess fiber.

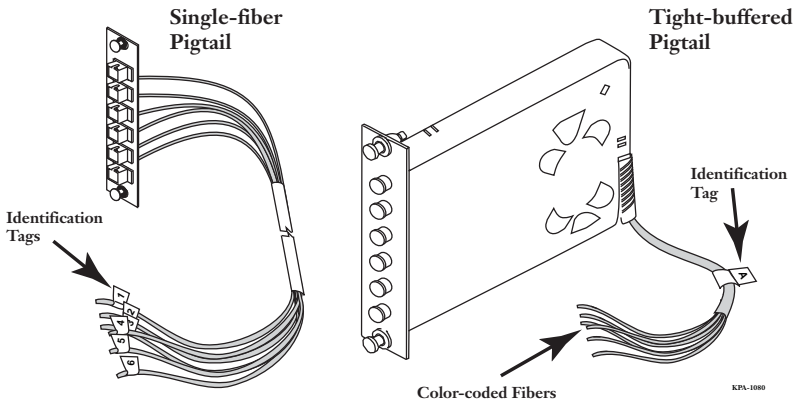

Figure 10 — Identification Tags

Step 3: Install preconnectorized panels/modules into the housing (Figure 11).

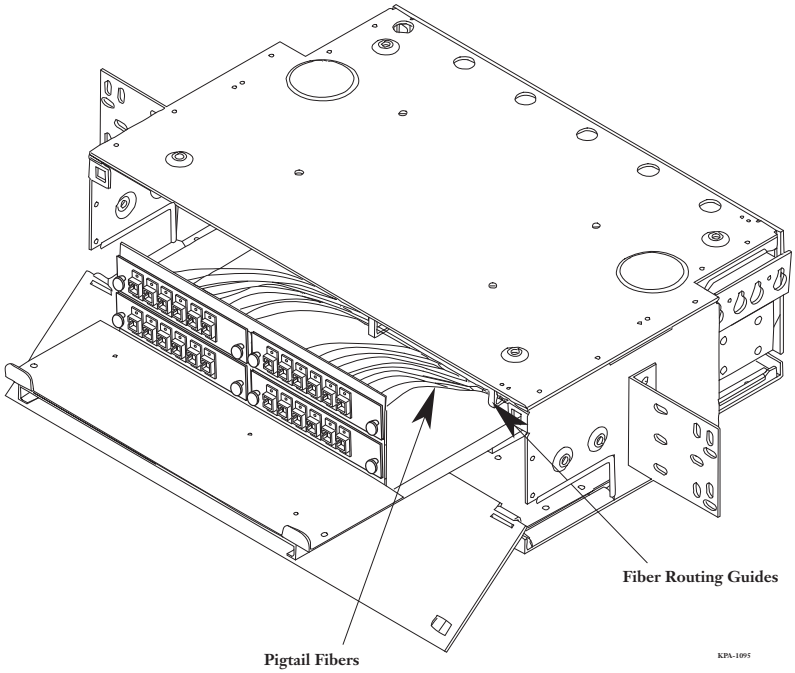

Figure 11 — Install Preconnectorized Panels into Housing

Step 4: Route the pigtail fibers through the routing clips on the back wall of the connector shelf to the splice point.

IMPORTANT: *Slide the connector shelf towards you to make sure there is enough fiber slack to reach the splice point.*

5.2 Prepare Cable for Splicing

Remove cable sheath according to the instructions provided with the cable. Do not expose the bare fiber until you are ready to terminate it.

5.3 Splice the Fibers

Splicing can be done with the splice tray in place on the slide shelf or completely removed from the housing. To remove the splice tray, pull the slide shelf out as far as possible and press down on the plastic tabs at the back of the tray (Figure 12).

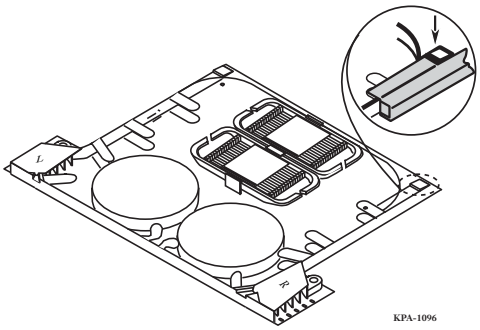

Figure 12 — Splice Tray

Step 1: Route the fibers to be spliced to the splice tray as shown in Figure 13.

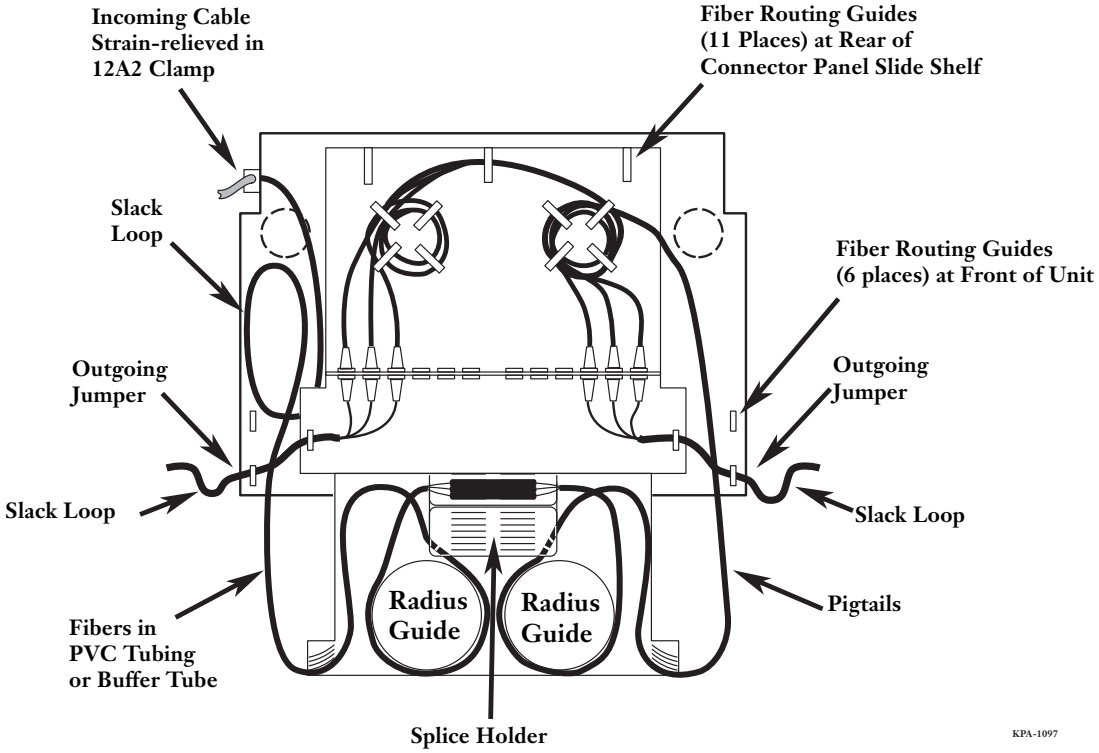

Figure 13 — Routing Configuration

Step 2: Secure the pigtails to the entry ports of the splice tray using cable ties as described in the instruction provided with the splice tray.

Step 3: Secure cable with buffer tubes to the entry point of the tray using cable ties as described in the instruction provided with the tray.

Step 4: Splice the fibers according to the instructions provided with the splicing equipment and with the splice tray.

Step 5: Record splice information as described in the instruction provided with the tray.

IMPORTANT: *Accurate recordkeeping is imperative to an organized installation.*

Step 6: Coil two loops of fiber around the radius guides on the splice tray. Store excess fiber slack in the bottom of the housing as shown in Figure 13.

Step 7: Slide the splice tray onto the shelf. Secure the tray to the shelf using the tabs on the tray.

5.4 Replace Doors (If They Were Removed)

Replace the front and rear doors, if they were removed. Secure the doors using the quarter-turn fasteners.

6. MAINTENANCE

The unit requires very little maintenance to ensure fibers and parts remain in good condition.

- External components may be cleaned occasionally with a damp, nonabrasive cloth.
- Check nuts, bolts, and screws; tighten as needed.
- Check fiber optic cable to make sure bends do not exceed the minimum bend radius.
- Check cables for unnecessary strain, for crimping or crushing at entries and exits, and for damage.
- Check unit record labels to make sure all are clear and accurate.

Corning Cable Systems LLC • PO Box 489 • Hickory, NC 28603-0489 USA
1-800-743-2671 • FAX +1-828-325-5060 • International +1-828-901-5000 • http://www.corning.com/cablesystems

Corning Cable Systems reserves the right to improve, enhance, and modify the features and specifications of Corning Cable Systems' products without prior notification. All trademarks are the properties of their respective owners. Corning Cable Systems is ISO 9001 certified.
© 2007 Corning Cable Systems. All rights reserved. Published in the USA.
SRP 003-270 / May 2007