REVISIONS				
LTR	DESCRIPTION	ECO NUM.	DATE	APPROVED
O	PROTOTYPE RELEASE		12/4/03	-
A	UPDATE ENCLOSURE	5233	5/5/04	JDW
B	UPDATE ELECTRICAL	5529	12/14/04	JDW
C	ADD 90VDC, 120VAC UNITS	5647	3/17/05	CDD

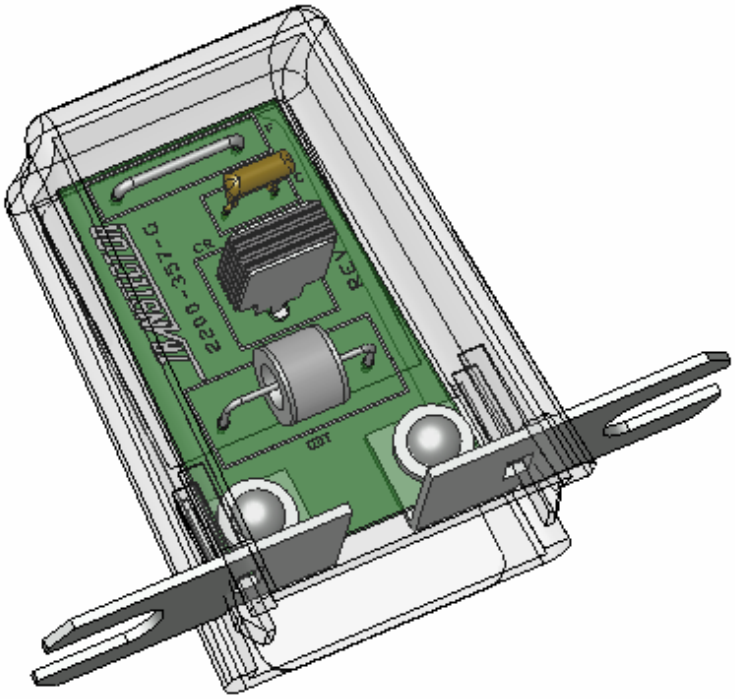

UNLESS OTHERWISE SPECIFIED DIM. IN INCHES BEFORE PLATING

MATERIAL: NOTED

DRAWN: MLH	DATE 10/16/03	
CHECKED: BJK	5/25/04	
ENGR. APPD: CDD	5/25/04	
PROJ. APPD: JDW	5/25/04	
APPROVED:		

Transtector Systems, Inc.
10701 Airport Road, Hayden, ID 83835
800.882.9110 208.772.8515 www.transtector.com

TITLE:

PRODUCT SPECIFICATION SXRR SERIES SUPPRESSORS

NOTICE: THE INFORMATION AND DESIGN CONTAINED HEREIN IS THE PROPERTY OF TRANSTECTOR SYSTEMS. ALL RIGHTS RESERVED.

SIZE	CAGE	DRAWING NUMBER	REV
A	30992	1400-504	C

SCALE = N/A

SURGE SUPPRESSOR MODELS: SXRR-50VDC, 90VDC & 120VAC

1. **GENERAL DESCRIPTION:** The SXRR series suppressors are high-speed, high current solid state/gas tube hybrid devices that are designed to provide equalization protection for railroad signaling applications. These devices, once installed line-to-line or line-to-ground on railway track circuits, will provide continuous protection to railroad signaling equipment in the event the track circuit becomes unbalanced as a result of surge strike levels up to 20kA 8/20us. Ideal for railroad signaling applications, the **SXRR series uses silicon avalanche suppressor diodes (SASD)** to suppress induced voltages and shunt surge currents away from the I/O interface. In the event of catastrophic strike events, the design will fail in the "open circuit" mode by incorporating fusing elements in series with a robust SASD circuit to prevent any "fail short" occurrence across the suppressor. Even after primary protection failure, the device will continue to protect the signaling system through a secondary gas discharge tube (GDT) element. The SXRR series is equipped with a clear indication window on the upper face that will darken in color in the unlikely event of device failure. It is intended to be installed across the line on the entrance board as close as practicable to where the outside conductors enter the enclosure.

2. **TRANSTECTOR PART NUMBERS**

   2.1. SXRR-12V 1101-707
   2.2. SXRR-90VDC 1101-744
   2.3. SXRR-120VAC 1101-764

3. **ELECTRICAL SERVICE:**

   3.1. **Service Voltage**
      3.1.1. SXRR-12V ..... 12V AC or DC
      3.1.2. SXRR-90VDC 90VDC
      3.1.3. SXRR-120VAC ..... 120V AC or DC
   3.2. **Maximum Continuous Operating Voltage**
      3.2.1. SXRR-12V ..... 50V DC
      3.2.2. SXRR-90VDC ..... 110V DC
      3.2.3. SXRR-120VAC ..... 130V AC
   3.3. **Configuration** ..... 2 wire
   3.4. **Input Connection** ..... 1/4" wide terminal clips

4. **ELECTRICAL PERFORMANCE:**

   4.1. **IEEE Test Parameters Per ANSI/IEEE C62.45 1992 & IEEE C62.41 1991**
      4.1.1. Location Category A: 6kV, 200A, 100kHz Ring Wave
      4.1.2. Location Category C3: 20kV, 10kA Combination Wave
      4.1.3. Long Wave 10/1000μs Stress Surge Per IEEE C62.41 1991 Section 10.2 & Table 8
   4.2. **Breakdown Voltage Threshold**
      4.2.1. SXRR-12V ..... Vbr ~ 75Vp @ 5ma
      4.2.2. SXRR-90VDC ..... Vbr ~ 125Vp @ 5ma
      4.2.3. SXRR-120VAC ..... Vbr ~ 200Vp @ 5ma
   4.3. **Voltage Protection Levels (Max.) 8/20μs Combination Wave**
      4.3.1. SXRR-12V ..... Vpl ~ 290V @ 20kA 8/20μs
      4.3.2. SXRR-90VDC ..... Vpl ~ 340V @ 20kA 8/20μs
      4.3.3. SXRR-120VAC ..... Vpl ~ 450V @ 20kA 8/20μs
   4.4. **Response Time (Max.)** ..... 5 nanoseconds

5. **OPERATING/STORAGE TEMPERATURE** ..... -40°C to +75°C

6. MECHANICAL/INSTALLATION:

6.1 Product Mechanical Size and Mounting: See Figure 1. The suppressor mounts across 1/4" (.6cm) sized studs on 2.38" (6cm) center to center spacing.
6.2 Product Housing: The suppressor is housed inside a clear, blue tinted polycarbonate module with a UL flame rating of 94-V0. The housing material is ecologically friendly and contains no Brominated or Chlorinated flame retardants. The weight is .1lb (.05 kg).
6.3 Product Weight: 0.1lb (0.05 kg)
6.4 Electrical Installation: The suppressor is intended to be installed in parallel with the electrical signal(s). It is recommended that a device be installed from line-to-line and from each line-to-ground for each signal pair.

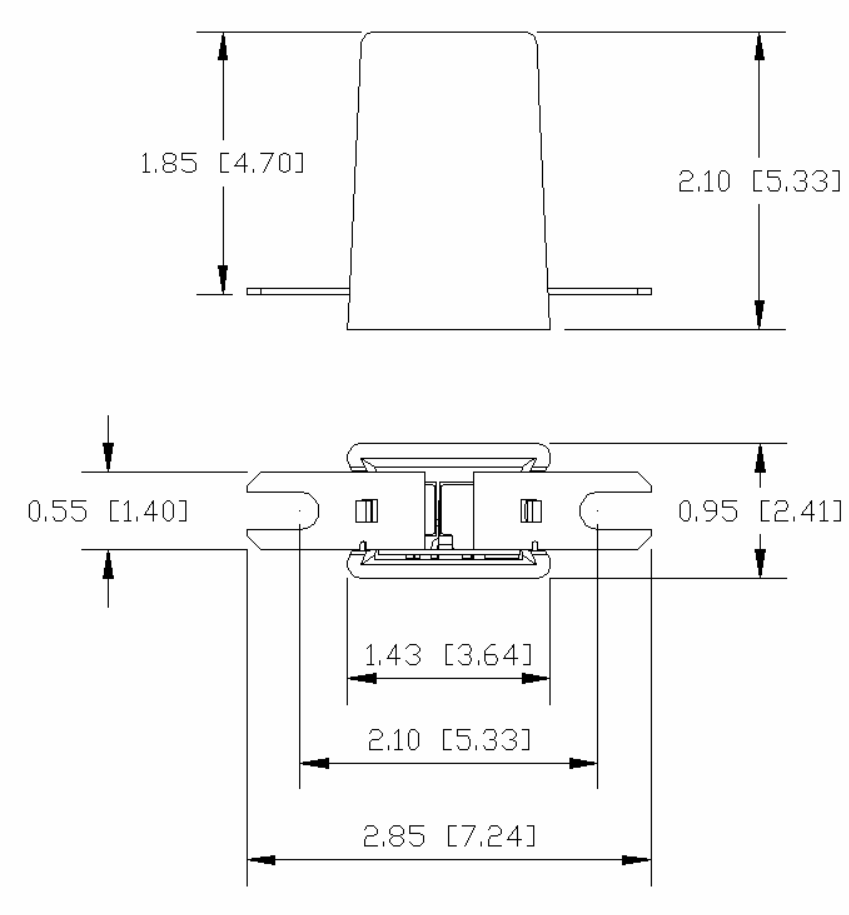

Figure 1: SXRR Series Mechanical Size and Mounting