Modular
High Current Connector System

Identification	Part number Male contact	Female contact	Wire gauge	Drawing	Dimensions in mm
Contacts with screw terminal for housing bulkhead mounting 	09 11 001 2675	09 11 001 2775	70 ... 240 mm²	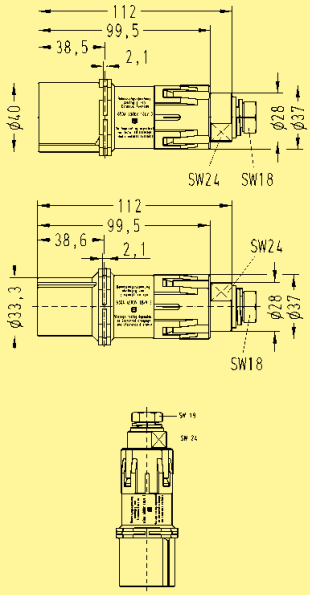 Please ensure to hold up the contact with a wrench size 24 to apply the tightening torque	
with axial screw terminal 	09 11 001 2671 09 11 001 2672	09 11 001 2771 09 11 001 2772	70 ... 120 mm² 150 ... 185 mm²	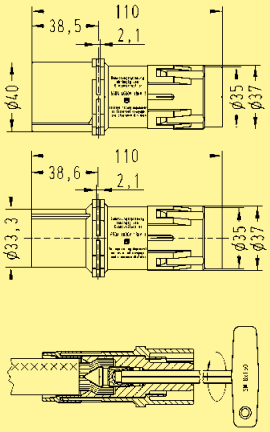 min. length of wrench: 60 mm	
Hexagonal driver Adapter (SW 8) 	**09 99 000 0372**				

Han HC Modular

Stock items in bold type