Product Specifications

COMMSCOPE®

on the go

WT-RTA14-12-96

Water Tower Rooftop Assembly, 3-sector, 14 ft face, twelve 2-3/8 in OD x 96 in plain end pipes included

Dimensions

Face Width	4.4 m | 14.5 ft
Pipe Outer Diameter	60.3 mm | 2 3/8 in
Height	2438.4 mm | 96.0 in
Length	4876.8 mm | 192.0 in
Weight	825.8 kg | 1820.6 lb
Width	4876.8 mm | 192.0 in

General Specifications

Product Type	Roofop assemblies
Pipe Length	2438.4 mm | 96.0 in
Pipe, quantity	12
Includes	Mount | Plain end pipes, twelve
Material Type	Hot dip galvanized steel
Mounting	Weld-on feet
Package Quantity	1
Sectors, quantity	3

©2012 CommScope, Inc. All rights reserved. All trademarks identified by ® or ™ are registered trademarks, respectively, of CommScope.
All specifications are subject to change without notice. See www.commscope.com for the most current information. Revised: March 8, 2011

WT-RTA14-12-96

Outline Drawing

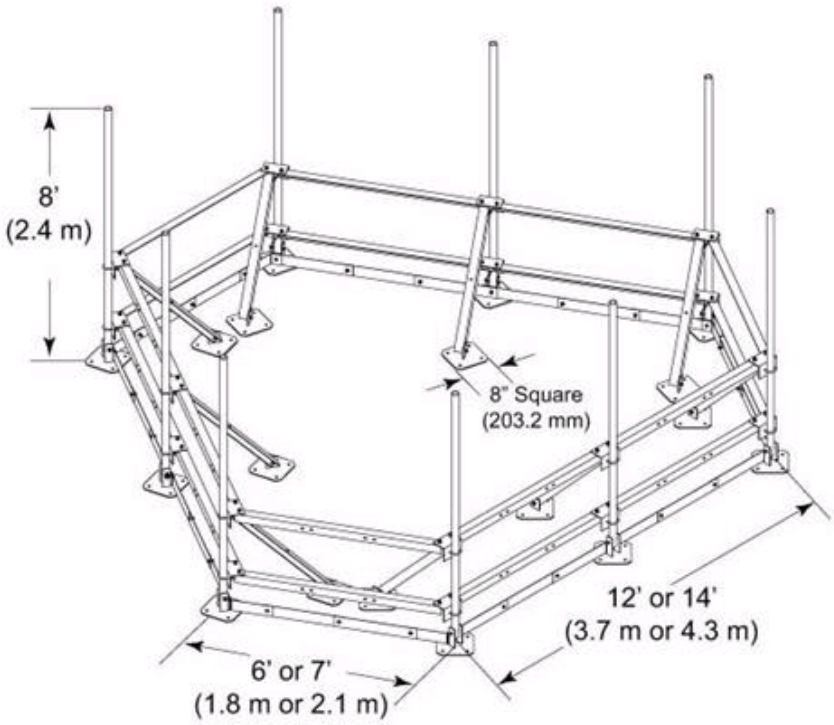

Regulatory Compliance/Certifications

Agency	Classification
ISO 9001:2008	Designed, manufactured and/or distributed under this quality management system

©2012 CommScope, Inc. All rights reserved. All trademarks identified by ® or ™ are registered trademarks, respectively, of CommScope.
All specifications are subject to change without notice. See www.commscope.com for the most current information. Revised: March 8, 2011