Product Specifications

COMMSCOPE®

on the go

VHLP6-15-2WH/A

1.8 m | 6 ft ValuLine® High Performance Low Profile Antenna, single-polarized, 14.250–15.350 GHz, PBR140, white antenna, polymer white radome without flash, standard pack—one-piece reflector

General Specifications

Packing	Standard pack
Radome Color	White
Radome Material	Polymer
Reflector Construction	One-piece reflector
Antenna Input	PBR140
Antenna Color	White
Antenna Type	VHLP - ValuLine® High Performance Low Profile Antenna, single-polarized
Diameter, nominal	1.8 m | 6 ft
Flash Included	No
Polarization	Single

Electrical Specifications

Beamwidth, Horizontal	0.8 °
Beamwidth, Vertical	0.8 °
Cross Polarization Discrimination (XPD)	30 dB
Electrical Compliance	Brazil Anatel Class 2 | Canada SRSP 314.5 Part A | ETSI 302 217 Class 3
Front-to-Back Ratio	74 dB
Gain, Low Band	45.9 dBi
Gain, Mid Band	46.2 dBi
Gain, Top Band	46.5 dBi
Operating Frequency Band	14.250 – 15.350 GHz
Radiation Pattern Envelope Reference (RPE)	7057A
Return Loss	17.7 dB
VSWR	1.30

Mechanical Specifications

Fine Azimuth Adjustment	±20°
Fine Elevation Adjustment	±15°
Mounting Pipe Diameter	115 mm | 4.5 in
Net Weight	62 kg | 137 lb
Side Struts, Included	1 inboard
Side Struts, Optional	1 inboard
Wind Velocity Operational	110 km/h | 68 mph
Wind Velocity Survival Rating	200 km/h | 124 mph

Wind Forces At Wind Velocity Survival Rating

Axial Force (FA)	7128 N | 1602 lbf
Side Force (FS)	3531 N | 794 lbf

©2012 CommScope, Inc. All rights reserved. All trademarks identified by ® or ™ are registered trademarks, respectively, of CommScope.
All specifications are subject to change without notice. See www.commscope.com for the most current information. Revised: January 26, 2011

Product Specifications

VHLP6-15-2WH/A

Twisting Moment (MT)	3197 N•m
Weight with 1/2 in (12 mm) Radial Ice	205 kg | 452 lb
Zcg with 1/2 in (12 mm) Radial Ice	450 mm | 18 in
Zcg without Ice	425 mm | 17 in

©2012 CommScope, Inc. All rights reserved. All trademarks identified by ® or ™ are registered trademarks, respectively, of CommScope.
All specifications are subject to change without notice. See www.commscope.com for the most current information. Revised: January 26, 2011

VHLP6-15-2WH/A

Wind Forces At Wind Velocity Survival Rating Image

Packed Dimensions

Gross Weight, Packed Antenna	193.0 kg | 425.5 lb
Height	2110.0 mm | 83.1 in
Length	2070.0 mm | 81.5 in
Volume	3.8 m³
Width	880.0 mm | 34.6 in

©2012 CommScope, Inc. All rights reserved. All trademarks identified by ® or ™ are registered trademarks, respectively, of CommScope.
All specifications are subject to change without notice. See www.commscope.com for the most current information. Revised: January 26, 2011

Antenna Dimensions And Mounting Information

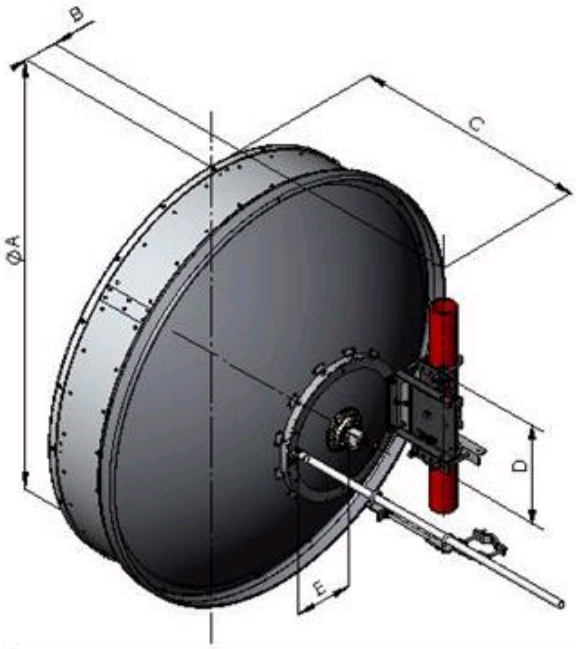

Dimensions in Inches (mm)					
Antenna Size, ft (m)	A	B	C	D	E
6 (1.8)	73.6 (1871)	16.3 (415)	36.5 (927)	19.3 (490)	11.6 (295)

Regulatory Compliance/Certifications

Agency	Classification
ISO 9001:2008	Designed, manufactured and/or distributed under this quality management system

* Footnotes

Axial Force (FA)	Maximum forces exerted on a supporting structure as a result of wind from the most critical direction for this parameter. The individual maximums specified may not occur simultaneously. All forces are referenced to the mounting pipe.
Cross Polarization Discrimination (XPD)	The difference between the peak of the co-polarized main beam and the maximum cross-polarized signal over an angle twice the 3 dB beamwidth of the co-polarized main beam.
Front-to-Back Ratio	Denotes highest radiation relative to the main beam, at 180° ±40°, across the band. Production antennas do not exceed rated values by more than 2 dB unless stated otherwise.
Gain, Mid Band	For a given frequency band, gain is primarily a function of antenna size. The gain of Andrew antennas is determined by either gain by comparison or by computer integration of the measured antenna patterns.
Operating Frequency Band	Bands correspond with CCIR recommendations or common allocations used

©2012 CommScope, Inc. All rights reserved. All trademarks identified by ® or ™ are registered trademarks, respectively, of CommScope.
All specifications are subject to change without notice. See www.commscope.com for the most current information. Revised: January 26, 2011

	throughout the world. Other ranges can be accommodated on special order.
Packing	Andrew standard packing is suitable for export. Antennas are shipped as standard in totally recyclable cardboard or wire-bound crates (dependent on product). For your convenience, Andrew offers heavy duty export packing options.
Radiation Pattern Envelope Reference (RPE)	Radiation patterns determine an antenna's ability to discriminate against unwanted signals under conditions of radio congestion. Radiation patterns are dependent on antenna series, size, and frequency.
Return Loss	The figure that indicates the proportion of radio waves incident upon the antenna that are rejected as a ratio of those that are accepted.
Side Force (FS)	Maximum side force exerted on the mounting pipe as a result of wind from the most critical direction for this parameter. The individual maximums specified may not occur simultaneously. All forces are referenced to the mounting pipe.
Twisting Moment (MT)	Maximum forces exerted on a supporting structure as a result of wind from the most critical direction for this parameter. The individual maximums specified may not occur simultaneously. All forces are referenced to the mounting pipe.
VSWR	Maximum; is the guaranteed Peak Voltage-Standing-Wave-Ratio within the operating band.
Wind Velocity Operational	The wind speed where the antenna deflection is equal to or less than 0.1 degrees. In the case of ValuLine antennas, it is defined as a maximum deflection of 0.3 x the 3 dB beam width of the antenna.
Wind Velocity Survival Rating	The maximum wind speed the antenna, including mounts and radomes, where applicable, will withstand without permanent deformation. Realignment may be required. This wind speed is applicable to antenna with the specified amount of radial ice.

©2012 CommScope, Inc. All rights reserved. All trademarks identified by ® or ™ are registered trademarks, respectively, of CommScope.
All specifications are subject to change without notice. See www.commscope.com for the most current information. Revised: January 26, 2011