Overview

The DesignLine Tri-Zone Sensor delivers superior performance for monitoring garage doors and multiple windows (such as bay windows) within close proximity of each other. This wireless sensor installs easily and cost-effectively, and is compatible with all GE 319.5 MHz control panels and receivers.

The Tri-Zone's advanced sensing design features a "tilt" sensor, making it the ideal solution for securing any garage door without having to run wires or secure a reed switch. Additionally, the sensor contains two external contacts which makes it ideal for protecting multiple windows such as bay windows. Equipped with a CR123A battery for long life, the Tri-Zone Sensor operates wirelessly with GE Security intrusion panels, and communicates each time the door is opened or closed. Because the sensor is fully supervised, it can detect and immediately report a low battery or a tamper situation to the central station. With a low-battery LED indicator, the sensor provides visual verification that a battery needs replacing and ensures optimum security coverage.

Standard Features

- Tri-zone sensing easily protects three zones in close proximity of each other, reducing installation time
- Easy garage door protection secures garage doors using "tilt" sensing capability with no magnet required
- Programmable tilt sensor output can instantly send a signal when it detects motion, or delay signal for up to one minute
- Low-battery LED indicator flashes every 5 seconds once a low battery is detected; signal is sent to the central station for easy identification
- Reed switch or hardwire inputs provides installation flexibility
- Fully supervised wireless transmitter allows for quick and easy installation

DesignLine Tri-Zone Sensor

Wireless three-zone sensing

GE
Security

North America
T 888-GE-SECURITY
888-437-3287

Asia
T 852-2907-8108
F 852-2142-5063

Australia
T 61-3-9239-1200
F 61-3-9239-1299

Europe
T 32-2-725-11-20
F 32-2-721-40-47

Latin America
T 305-593-4301
F 305-593-4300

gesecurity.com

Specifications subject to change without notice.

© 2009 General Electric Company
All Rights Reserved

Specifications

Operating Temperature (Maximum)	140°F (60° C)
Operating Temperature (Minimum)	14°F (-10° C)
Operating Voltage (Minimum)	3V DC CR123A lithium battery
Color	White
Enclosure Material	ABS PA-765
UL Rating(s)	UL 634 Level 1
FCC Standard	Part 15
Dimensions (L x W x H)	2.90" x 1.65" x 1.0" (73.80 x 42 x 25.50 mm)
Battery	CR123A (Panasonic or GE-approved equivalent)
Typical Battery Life	5 years
Transmitter Frequency	319.508 MHz
Transmitter Frequency Tolerance	+/- 8 khz
Bandwidth	24 khz
Modulation Type	Amplitude shift key (ASK)
Unique ID Codes	16 million
Peak Field Strength	Typical 40,000 uV/m at 3 meters

Ordering Information

TX-8300-01-1	DesignLine Tri-Zone Sensor

Dimensional Diagram

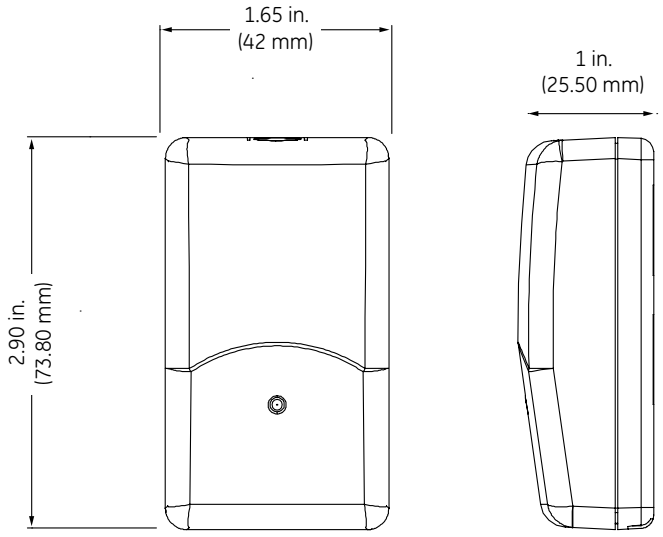

imagination at work